MESSENGER

MDIS CDR/RDR SOFTWARE INTERFACE SPECIFICATION

Version 1.2.19

Prepared by:

Scott Murchie, Alan Mick, Louise Prockter, and Andrew Rivkin
JHU/APL

Edward Guinness and Jennifer Ward
PDS Geosciences Node
Washington University

Updated September 30, 2014

DOCUMENT REVIEW

This document and the archive it describes have been through PDS Peer Review and have been accepted into the PDS archive.

Scott Murchie, MESSENGER Co-Investigator/MDIS, has reviewed and approved this document.

Patricia Garcia, PDS Imaging Node Representative, has reviewed and approved this document.

Susan Ensor, MESSENGER Science Operations Center Lead, has reviewed and approved this document.

DOCUMENT CHANGE LOG

Date	Description	Sections affected
UNK	Initial Draft	All
2/11/08	Reformatted and updated, JW & SM	All
4/29/08	Updated description of data quality index Updated description of pivot-related keywords Updated description of shifting of image due to pixel binning	All
11/19/08	Updated description of pivot-related keywords Updated description of CDR and DDR labels and keywords Updated CDR and DDR index tables Update filter bandpass descriptions	All
2/13/09	Updated keywords in Table 3-3	Table 3-3
9/3/09	Updated keywords as result of flight software update. Added description of geographic distribution of BDRs Added description of directory structure for BDRs Redefined file names for BDRs and MDRs to add tile numbers Added description of stacking order of component images BDRs and MDRs Updated index table	Sections 2.5 and 3, Appendices B, C, D.
9/3/09	Added OBSERVATION_TYPE, SITE_ID, ORBIT_NUMBER to labels. Updated descriptions of data quality index fields.	Section 3.3.5, Appendices B, C, D.
6/10/11	Replaced document approvals with document review information. Updated descriptions of number of bits per pixel in EDRs and of values of WVLRATIO. Made additional minor edits.	Document Review Appendix B
8/1/11	Updated for PDS peer review comments. Updated link to NASAView. Changed formatting of OBSERVATION_TYPE	Section 4.2, Appendix B
5/1/12	Revised BDR and MDR data product descriptions and labels. Updated CDR sample label.	Sections 2.4.3, 2.4.4, 2.5.2.3, 3.3.7, 3.3.8, Appendices C, E, F
5/15/12	Added VOLUME_ID information.	Section 3.3
5/16/12	Updated document name for Applicable Document 4. Reference Applicable Document 4 for PDS delivery schedule and mission phase definitions. Remove out-of-date mission phase definitions in Appendix K.	Sections 1.3, 2.5.4 Appendices B, K
5/22/12	Updated description of BDR and MDR tiles, and map projection keywords. Updated BDR and MDR index table columns.	Sections 2.4.3, 2.4.4, 3.3.7, 3.3.8, Table 3.4
8/30/12	Updated description of BDR and MDR tiles. Updated descriptions of browse products. Updated descriptions of OBSERVATION_TYPE	Sections 2.4.3, 2.4.4, 3.3.7, 3.3.8, 3.3.11, Appendix B
9/28/12	Clarified boundaries of MDR and BDR tiles. Descriptions of imaging campaigns and relationships to BDRs and MDRs updated.	Sections 2.2, 2.3, 2.4
11/26/12	Descriptions of image stacking orders in BDRs and MDRs updated. Extended mission observation type descriptions updated Contents of CALIB directory updated Description of calibration procedure updated Updated descriptions of MDR and BDR tiles	Sections 2, 3
5/31/13	Extended mission 2 observation type descriptions updated Description of 3-color map RDRs (MD3s) added Typos fixed	Sections 2, 3, Appendix G

Date	Description	Sections affected
6/12/13	Updated file naming convention to reference “36.3” rule versus “27.3” rule.	Section 3.3
6/12/14	Description of 5-color map RDRs (MP5s) added Description of high-incidence angle map illuminated from the east RDRs (HIEs) added Description of high-incidence angle map illuminated from the west RDRs (HIWs) added Description of low-incidence angle map RDRs (LOIs) added Description of regional targeted mosaics (RTMs) added	All
6/12/14	Changed “Experimental Data Record” to “Experiment Data Record”. Made updates to CDR/DDR file naming conventions that were implemented due to spacecraft clock reset. Updated MET descriptions in the MDIS instrument raw parameters.	1.3, 3.3.5.1, 3.3.6.1, Appendix B
8/7/14	Added MDR to the list of volumes that contain a CALIB directory.	3.3
9/11/14	Fixed inconsistencies in instrument description Corrected errors in equations for map projection Clarified various terms Updated descriptions of most map products	All
9/18/14	Reconciled various versions of document Additional edits based on peer review comments	All
9/29/14	Added MECURY ORBIT YEAR 4 and MERCURY ORBIT YEAR 5 to list of mission phases Replaced HIE, HIW, LOI, MP5, and RTM labels	Appendices B, H-L
9/30/14	Fixed minor typos.	All

TBD ITEMS

Section	Description
Appendices	Sample browse product labels to be added.

CONTENTS

1. INTRODUCTION 11
1.1 Purpose and Scope 11
1.2 Contents 12
1.3 Applicable Documents and Constraints 12
1.4 Relationships with Other Interfaces 13
2. DATA PRODUCT CHARACTERISTICS AND ENVIRONMENT 13
2.1 Instrument Overview 13
2.1.1 Hardware Overview 14
2.1.2 Pivot Mechanism 15
2.1.3 MDIS Data Compression 16
2.1.4 Exposure Control 18
2.1.5 Optical Design 19
2.1.6 Filters 21
2.1.7 Flatfield Non-uniformity 22
2.1.8 Dark Columns 22
2.1.9 Pixel Shift Due to Pixel Binning 23
2.2 Flyby Imaging Overview 24
2.3 Orbital Imaging Overview 24
2.3.1 Primary Mission 24
2.3.2 Extended Mission 1 26
2.3.3 Extended Mission 2 27
2.4 Data Product Overview 28
2.4.1 CDRs 28
2.4.2 DDRs 28
2.4.3 BDRs 28
2.4.4 MDRs 29
2.4.5 MD3s 29
2.4.6 MP5s 29
2.4.7 HIEs 30
2.4.8 HIWs 30
2.4.9 LOIs 30
2.4.10 RTMs 30
2.5 Data Processing 31
2.5.1 Data Processing Level 31
2.5.2 Data Product Generation 32
2.5.3 Data Flow and Transmittal to PDS 36
2.5.4 Transmittal Time Line 37
2.6 Standards Used in Generating Data Products 37
2.6.1 PDS Standards 37
2.6.2 Time Standards 37
2.6.3 Coordinate Systems 37
2.6.4 Data Storage Conventions 38
2.7 Data Validation 38
3. DETAILED DATA PRODUCT SPECIFICATIONS 39
3.1 Data Product Structure and Organization 39
3.2 Geometric Elements 39
3.3 Archive Volume Structure and Contents 39
3.3.1 Root Directory 40
3.3.2 Index Directory 40

3.3.3 Catalog Directory....43
3.3.4 Document Directory....44
3.3.5 CDR Directory (CDR Volumes Only)....44
3.3.6 DDR Directory (DDR Volumes Only)....48
3.3.7 BDR Directory (BDR Volumes Only)....51
3.3.8 MDR Directory (MDR Volumes Only)....55
3.3.9 MD3 Directory (MD3 Volumes Only)....59
3.3.10 MP5 Directory (MP5 Volumes Only)....63
3.3.11 HIE Directory (HIE Volumes Only)....66
3.3.12 HIW Directory (HIW Volumes Only)....70
3.3.13 LOI Directory (LOI Volumes Only)....74
3.3.14 RTM Directory (RTM Volumes Only)....77
3.3.15 Calib Directory....80
3.3.16 Browse Directory....83
3.3.17 Extras Directory....83

4. APPLICABLE SOFTWARE....84

4.1 Utility Programs....84
4.2 Applicable PDS Software Tools....84
4.3 Tutorial information....84

APPENDIX A. DATA ARCHIVE TERMS....85
APPENDIX B. LABEL AND HEADER DESCRIPTIONS....86
APPENDIX C. CDR LABEL....114
APPENDIX D. DDR LABEL....118
APPENDIX E. BDR LABEL....122
APPENDIX F. MDR LABEL....124
APPENDIX G. MD3 LABEL....126
APPENDIX H. MP5 LABEL....128
APPENDIX I. HIE LABEL....130
APPENDIX J. HIW LABEL....132
APPENDIX K. LOI LABEL....134
APPENDIX L. RTM LABEL....136
APPENDIX M. CDR BROWSE PRODUCT LABEL....138
APPENDIX N. BDR BROWSE PRODUCT LABEL....142
APPENDIX O. MDR BROWSE PRODUCT LABEL....143
APPENDIX P. MD3 BROWSE PRODUCT LABEL....144
APPENDIX Q. MP5 BROWSE PRODUCT LABEL....145
APPENDIX R. HIE BROWSE PRODUCT LABEL....146
APPENDIX S. HIW BROWSE PRODUCT LABEL....147
APPENDIX T. LOI BROWSE PRODUCT LABEL....148
APPENDIX U. RTM BROWSE PRODUCT LABEL....149
APPENDIX V. ATMEL TH7888A DATA SHEET....150

FIGURES AND TABLES

Figure 1-1: MDIS Instrument (exterior view). 11
Table 2-1: MDIS Camera Details. 13
Figure 2-2: MESSENGER Spacecraft Instrument Deck. 14
Figure 2-3: MDIS Design. 15
Figure 2-4: Range of motion of the MDIS pivot platform.. 16
Figure 2-5a: MDIS/DPU Real-time Compression flowchart. 17
Figure 2-5b: MESSENGER Main Processor (MP) image compression flowchart. 17
Figure 2-6: Mapping of 12 bits to 8 bits. 18
Figure 2-7: Autoexposure algorithm decision tree.. 19
Figure 2-8: WAC optical layout. 20
Table 2-9: MDIS specifications. 20
Figure 2-10: NAC optical layout. 21
Table 2-11: WAC Filters Specifications 21
Figure 2-12: Non-uniformity 22
Figure 2-13: Pixels intended for dark columns, and actual pixels used 23
Table 2-14: Definitions of MDIS data products. 31
Table 2-15: Processing Levels for Science Data Sets. 32
Table 2-16: Solar irradiance used to convert radiance to units of I/F. 34
Figure 2-17: Sequential processing of EDRs to yield RDRs. 36
Table 3-1: Root Directory Contents. 40
Table 3-2: Index Directory Contents. 40
Table 3-3: CDR/DDR Index Table Contents. 42
Table 3-4: BDR/MDR/MD3/MP5/HIE/HIW/LOI/RTM Index Table Contents. 43
Table 3-5: Catalog Directory Contents. 43
Table 3-6: Document Directory Contents. 44
Table 3-7: Filter numbers and their bandpasses. 45
Table 3-8. MDIS-specific values for CDR label keywords. 48
Table 3-9. MDIS-specific values for DDR label keywords. 51
Table 3-10. Latitude and longitude limits of Mercury Charts. 52
Table 3-11. MDIS-specific values for BDR label keywords. 55
Table 3-12. MDIS-specific values for MDR label keywords. 59
Table 3-13. MDIS-specific values for MD3 label keywords. 62
Table 3-14. MDIS-specific values for MP5 label keywords. 66
Table 3-15. MDIS-specific values for HIE label keywords. 70
Table 3-16. MDIS-specific values for HIW label keywords. 73
Table 3-17. MDIS-specific values for LOI label keywords. 77
Table 3-18. MDIS-specific values for RTM label keywords. 80
Table 3-19: Calib Directory Contents. 82

ACRONYMS AND ABBREVIATIONS

ACT	Applied Coherent Technology Corporation
APL	The Johns Hopkins University Applied Physics Laboratory
ASCII	American Standard Code for Information Interchange
BDR	Map Projected Basemap Reduced Data Record
BP	Bandpass
BW	Bandwidth
CCD	Charge-Coupled Device
CDR	Calibrated Data Record
CODMAC	Committee on Data Management and Computation
DDR	Derived Data Record
DN	Data Number
DPU	Data Processing Unit
DVD	Digital Video Disc
e	Emergence angle of reflected light, relative to local surface normal
EDR	Experiment Data Record
FOV	Field-of-view
FPGA	Field-programmable Gate Arrays
FTP	File Transfer Protocol
FWHM	Full Width at Half Maximum
g	Phase angle of reflected sunlight measured at MDIS
GRS	MESSENGER Gamma-Ray Spectrometer
HIE	Map Projected High-incidence Angle Basemap Illuminated from the East RDR
HIW	Map Projected High-incidence Angle Basemap Illuminated from the West RDR
IAU	International Astronomical Union
i	Incidence angle of solar illumination, relative to local surface normal
I/F	Intensity divided by flux, or the ratio of radiance to incident solar irradiance
IFOV	Instantaneous field-of-view
ISO	International Standards Organization
JHU/APL	The Johns Hopkins University Applied Physics Laboratory
JPL	Jet Propulsion Laboratory
LOI	Map Projected Low-incidence Angle Basemap Reduced Data Record
MASCS	MESSENGER Mercury Atmospheric and Surface Composition Spectrometer
MESSENGER	MErcury, Surface, Space ENvironment, GEochemistry, and Ranging
MDIS	MESSENGER Mercury Dual Imaging System
MD3	Map Projected Multispectral Reduced Data Record (3-Color)
MDR	Map Projected Multispectral Reduced Data Record (8-Color)
MET	Mission Elapsed Time
MLA	MESSENGER Mercury Laser Altimeter
MOC	Mars Orbiter Camera
MP	Main Processor
MP5	Map Projected Multispectral Reduced Data Record (5-Color)
NAC	Narrow Angle Camera
NAIF	Navigation and Ancillary Information Facility
NASA	National Aeronautics and Space Administration

NEAR	Near Earth Asteroid Rendezvous (mission)
OCF	Optical Calibration Facility
PCK	Planetary Constant Kernel (SPICE)
PDS	Planetary Data System
PNG	Portable Network Graphics (file format)
RDR	Reduced Data Record
RTM	Map Projected Regional Targeted Mosaic Reduced Data Record
SIS	Software Interface Specification
SOC	Science Operations Center
SNR	Signal-to-noise Ratio
SQL	Structured Query Language
SPICE	Spacecraft Planet Instrument C-matrix Events; a set of data formats for spacecraft ephemeris, attitude, and instrument pointing
SSR	Solid State Recorder
TBD	To Be Determined
UTC	Coordinated Universal Time
WAC	Wide Angle Camera
XRS	MESSENGER X-ray Spectrometer

1. INTRODUCTION

1.1 Purpose and Scope

This Software Interface Specification (SIS) describes the organization and contents of the MESSENGER Mercury Dual Imaging System (MDIS) Calibrated Data Record (CDR) and Reduced Data Record (RDR) archive. This archive includes data from the two cameras onboard the MESSENGER spacecraft: the Wide Angle Camera (WAC) and the Narrow Angle Camera (NAC) (see Figure 1-1 below). The MDIS CDR/RDR data products are deliverable to the Planetary Data System (PDS) and the scientific community that it supports. All data formats are based on the PDS standard.

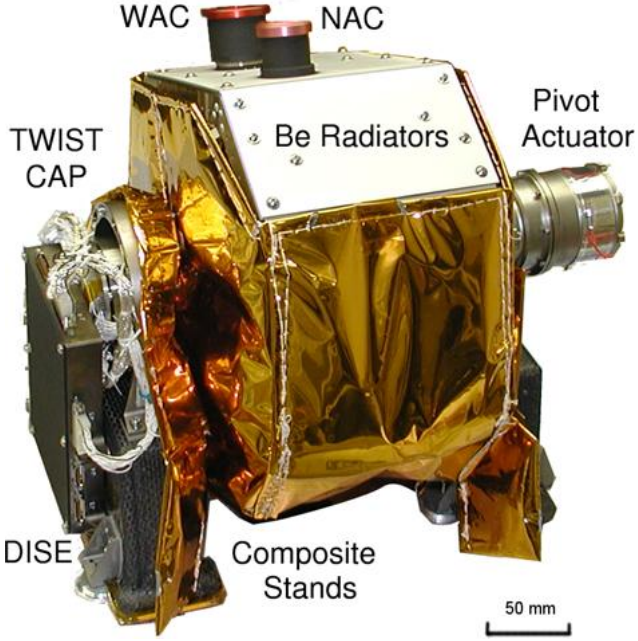

Figure 1-1: MDIS Instrument (exterior view).

There are ten MDIS data sets defined in this SIS document. These include:

1) Calibrated Data Records (CDRs)

2) Derived Data Records (DDRs)

3) Map Projected Basemap Reduced Data Records containing the first global 750-nm mosaic illuminated for morphology, with a typical solar incidence angle of 68° (BDRs)

4) Map Projected Multispectral Reduced Data Records (MDRs) containing an 8-color global map illuminated at a minimized solar incidence angle

5) Map Projected Multispectral Reduced Data Records (MD3s) containing a 3-color regional map illuminated at a minimized solar incidence angle

6) Map Projected Multispectral Reduced Data Records (MP5s) containing a 5-color regional map of the northern hemisphere illuminated at a minimized solar phase angle

7) Map Projected Basemap Reduced Data Records containing an additional global 750-nm mosaic illuminated at high solar incidence angle from the east, to accentuate low relief morphology (HIEs)

8) Map Projected Basemap Reduced Data Records containing an additional global 750-nm mosaic illuminated at high solar incidence angle from the west, to accentuate low relief morphology (HIWs)

9) Map Projected Basemap Reduced Data Records containing an additional global 750-nm mosaic illuminated at a minimized solar incidence angle, to accentuate albedo variations (LOIs)

10) Map Projected Regional Targeted-observation Mosaics containing one or more NAC or WAC frames pointed at a high science priority region of interest (RTMs)

These data sets are defined in section 2.4 and described in more detail in sections 3.3.5 through 3.3.14 of this document.

This SIS is useful to those who wish to understand the format and content of the MDIS data products and ancillary support data. The SIS applies to the MDIS CDR/RDR data products produced during the course of MESSENGER preflight calibration and mission operations. The users for whom this SIS is intended are the scientists who will analyze the data, including those associated with the MESSENGER Project and those in the general planetary science community.

1.2 Contents

This Data Product SIS describes how data products generated by the MESSENGER team are processed, formatted, labeled, and uniquely identified. The document details standards used in generating the products and software that may be used to access the products. Data product structure and organization is described in sufficient detail to enable a user to read the product. Finally, an example of each product label is provided.

1.3 Applicable Documents and Constraints

This MDIS CDR/RDR SIS is responsive to the following documents:

1. MESSENGER Mercury: Surface, Space Environment, Geochemistry, Ranging: A mission to Orbit and Explore the Planet Mercury, Concept Study, March 1999.
2. Planetary Data System Archive Preparation Guide (APG), August 29, 2006, Version 1.1, JPL D-31224.
3. Planetary Data System Standards Reference, March 20, 2006, Version 3.7, JPL D-7669, Part-2.
4. MESSENGER Data Management and Archiving Plan, The Johns Hopkins University APL, 7384-9019.
5. [PLR] Appendix 7 to the discovery program Plan: Program Level Requirement for the MESSENGER Discovery project, June 20, 2001.

6. MESSENGER Instrument DPU/MDIS Flight Software Specification, John Hayes, 7390-9041, Revision a, Feb. 26, 2004. Describes the instrument flight software.
7. MDIS Compression Description, Pat Murphy, SRM-03-056, Aug. 25, 2003. Describes the MESSENGER Main Processor wavelet compression, sub-framing and binning flight software.
8. Hawkins, S. E., III, et al., Multi-Spectral Imager on the Near Earth Asteroid Rendezvous mission, Space Sci. Rev., 82, 31-100, 1997.
9. Hawkins, S.E., III, et al., The Mercury Dual Imaging System on the MESSENGER Spacecraft, Space Sci Rev 131: 247–338, DOI 10.1007/s11214-007-9266-3, 2007.
10. Hansen, O. L., Surface temperature and emissivity of Mercury, Astrophys. J., 190, 715-717, 1974.
11. MESSENGER Mercury Dual Imaging System (MDIS) Experiment Data Record (EDR) Software Interface Specification (SIS) document, The Johns Hopkins University, APL, V2G, Nov. 9, 2007.
12. Davies, M.E. and F.Y. Katayama, The Control Network of Mercury, Rand Corporation Report R2089, 1976.

1.4 Relationships with Other Interfaces

Data products described in this SIS are produced by the MESSENGER Science Operations Center (SOC). Changes to the SOC processing algorithms may cause changes to the data products and, thus, this SIS. The MDIS CDR/RDR products are derived from MDIS Experiment Data Record (EDR) products. As such, changes to the EDR product may affect the CDR/RDR products. Changes in MDIS data products or this SIS may affect the design of the MDIS archive volumes.

2. DATA PRODUCT CHARACTERISTICS AND ENVIRONMENT

2.1 Instrument Overview

The Wide Angle Camera (WAC) supports 12 band pass filters, while the Narrow Angle Camera (NAC) is monochromatic. Table 2-1 summarizes relevant parameters for both the WAC and NAC cameras. The CDR format for each camera is identical.

	Narrow Angle Camera (NAC)	**Wide Angle Camera (WAC)**
Field of View	1.5 degree	10.5 degree
Scan Range	-40º to +50º from spacecraft +z	-40º to +50º from spacecraft +z
Exposure Time	1 to 9989 ms	1 to 9989 ms
Frame Transfer Time	3.4 ms	3.4 ms
Image Readout Time	1 s	1 s
Spectral Filters	1	12 positions
Focal Length	550 mm	78 mm
Collecting Area	462 mm^2	48 mm^2
Detector- TH7888A	CCD 1024 x 1024, 14 µm pixels	CCD 1024 x 1024, 14 µm pixels
Pixel FOV	5.1 m at 200 km altitude	35.8 m at 200 km altitude

Table 2-1: MDIS Camera Details.

2.1.1 Hardware Overview

Most of the MESSENGER instruments are fixed-mounted (Figure 2-2), so that coverage of Mercury is obtained by spacecraft motion over the planet. The imaging system uses a pivot platform to accommodate flyby imaging and optical navigation, as well as imaging during the orbital phase.

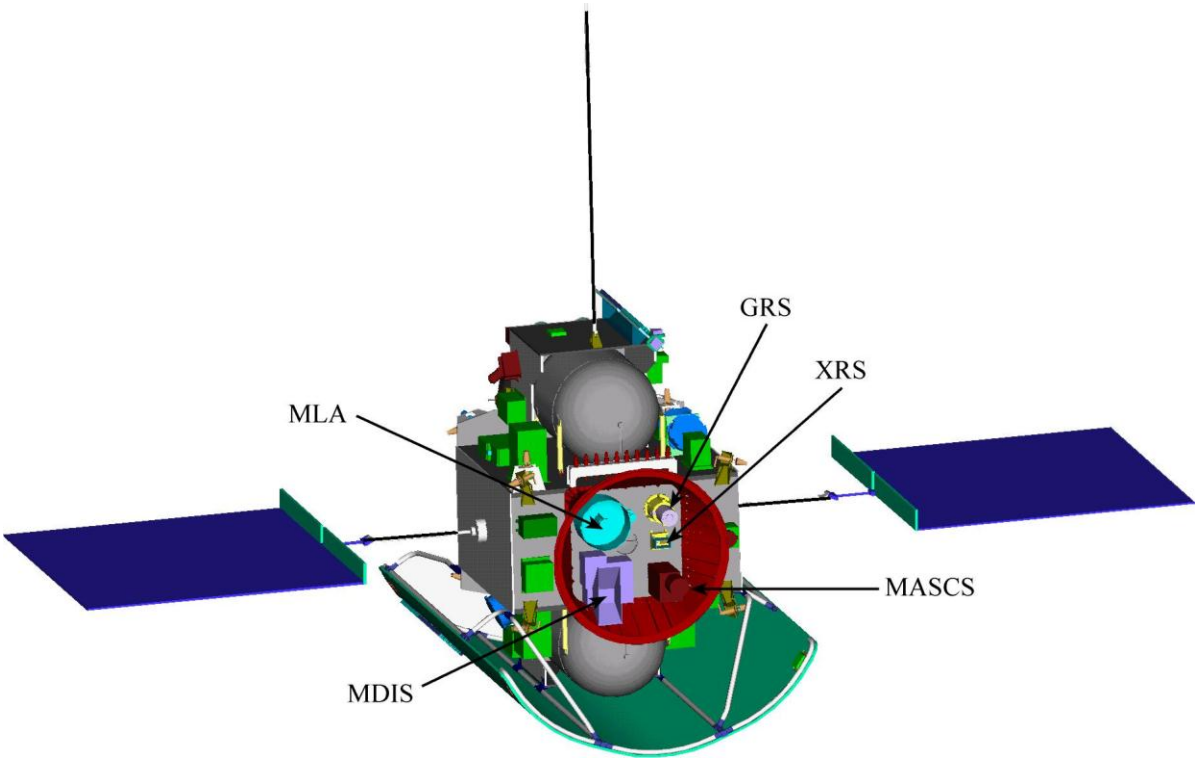

Figure 2-2: MESSENGER Spacecraft Instrument Deck.

The full MDIS instrument includes the pivoting dual camera system as well as the two redundant external DPUs. The dual camera assembly without the DPUs is usually simply referred to as "MDIS." The overall design and look of MDIS, shown in Figure 2-3, was driven by mass limitations, the severe thermal environment at Mercury, and the requirement for a large field-of-regard for optical navigation and off-nadir pointing. The total mass of MDIS is 8.32 kg, including flight blankets, harness to DPU, and thermal gasket.

The pivot platform houses the multispectral WAC and the monochrome NAC. The thermal design maintains the CCD detectors in the WAC and NAC within their desired operating temperature range of -45°C to -10°C. Only one DPU may be active at a time, and due to thermal constraints only one camera will operate at a time; however, observations with the two cameras can be interleaved at 5-s intervals. A separate electronics assembly accommodates switching between the various modes of operating with the redundant DPUs. The pivot platform has a large range of motion (~240°) to allow the cameras to be "tucked away" to protect the optics from contamination.

2.1.2 Pivot Mechanism

The MDIS pivot platform is controlled by a stepping motor (Fig. 2-3). The motor phases are controlled directly by the DPU software to move the platform. The phase pattern can be adjusted by software to move the platform forwards or backwards. The pivot platform's range of motion is mechanically constrained by "hard" stops. The range of motion is further constrained by "soft" stops applied by the software. The nominal allowed range is shown in Fig. 2-4. The total range of motion of MDIS is about 240°, limited by hard mechanical stops in the pivot motor. The hard stops are fixed at -185º and 55º. The pivot motor drive-train provides precision rotation over the 90° operational range of motion (Figure 2-4) about the spacecraft +Z axis.

The MDIS pivot actuator is capable of accurately stepping in intervals of 0.01° (~150 µrad) per step. Pointing knowledge is determined by first "homing" the instrument, which is accomplished by driving the actuator into one of the mechanical hard stops for a period of time sufficient to ensure the orientation of the instrument if it had been previously stopped at the opposite extreme of travel. The rotational speed of the pivot platform is 1.1°/s. Once the location of the pivot actuator is known, the flight software retains this knowledge and subsequent pointing commands are achieved by counting pulses (steps) to the motor.

There are two alternative measures of pivot position: by counting motor steps following homing, as described above, or by using the position returned from a pivot position resolver.

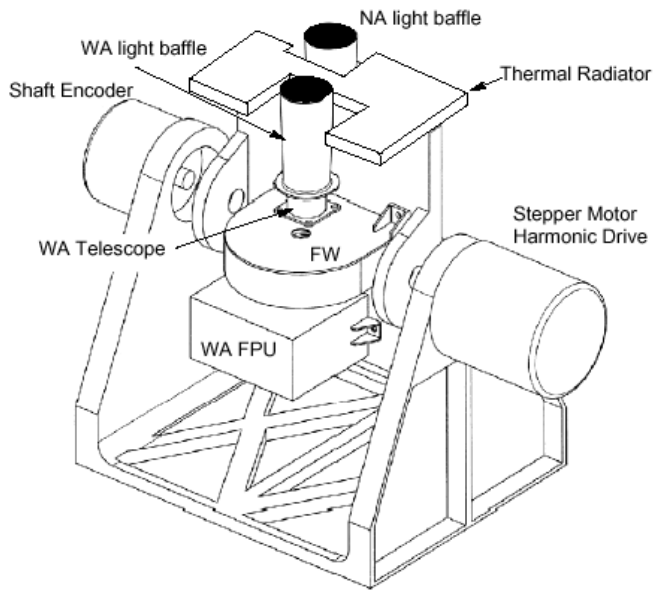

Figure 2-3: MDIS Design.

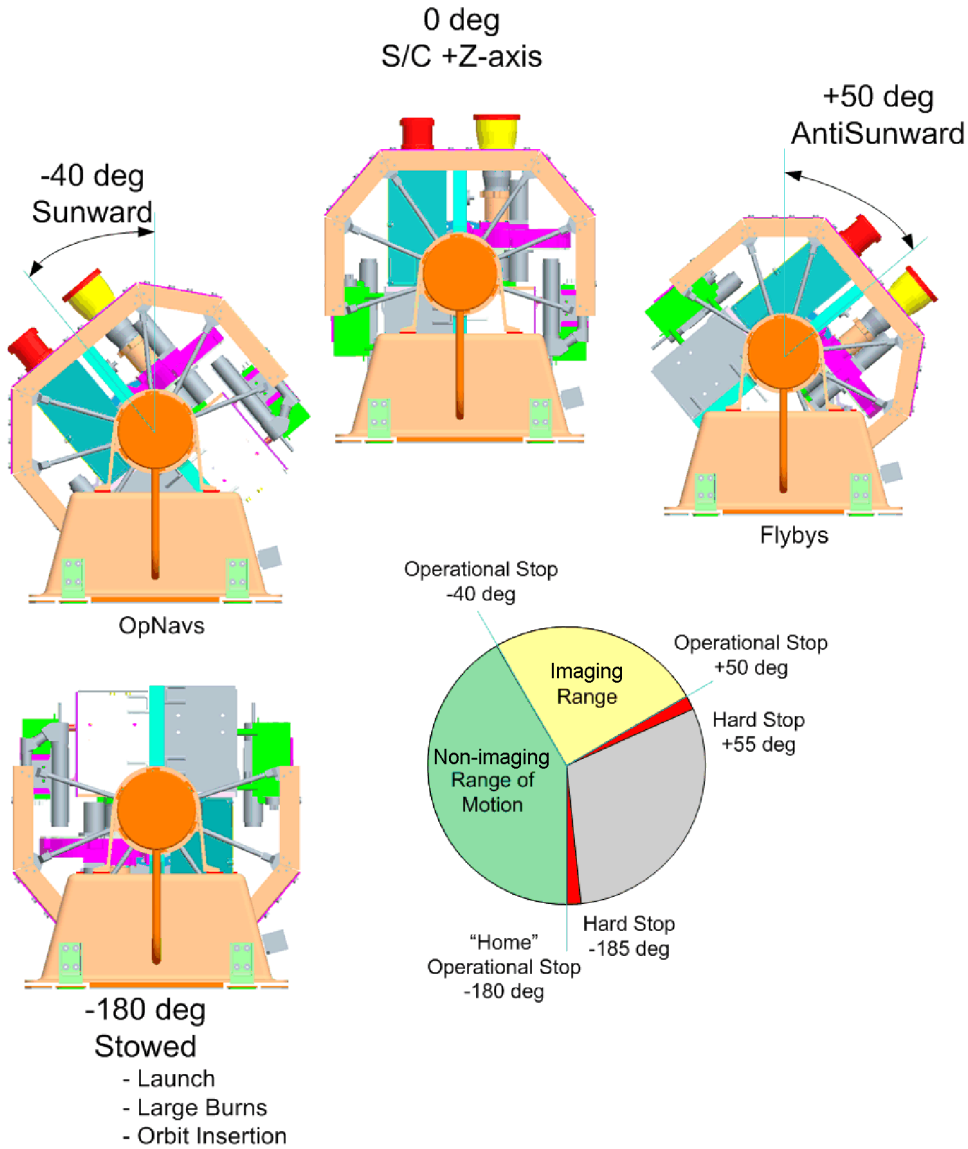

Figure 2-4: Range of motion of the MDIS pivot platform. Operational range is -40° sunward to +50° antisunward (planetward). When stowed, the sensitive first optic of each telescope is protected.

2.1.3 MDIS Data Compression

The MESSENGER mission requires compression to meet its science objectives within the available downlink. Figure 2-5 summarizes the compression options available to MDIS at the instrument level and using the spacecraft main processor (MP). At the focal plane, 2×2 binning is available on-chip to reduce the 1024×1024 images to 512×512 format, 12-bit data number (DN) levels can be converted to 8 bits, and data can be compressed losslessly. After data are written to the recorder, they can be uncompressed and recompressed by the MP more aggressively using any of several options: additional pixel-binning, subframing, and lossy compression using an

integer wavelet transform. The strategy for MP compression is that most data except flyby imaging will be wavelet compressed, typically 4:1 for monochrome data and to a lower ratio (≤ 4:1) for orbital color data. Color imaging but not monochrome imaging may be further pixel-binned. For the special case of optical navigation images, there is a "jailbar" option that saves selected lines of an image at a fixed interval for optical navigation images of Mercury during flyby approaches.

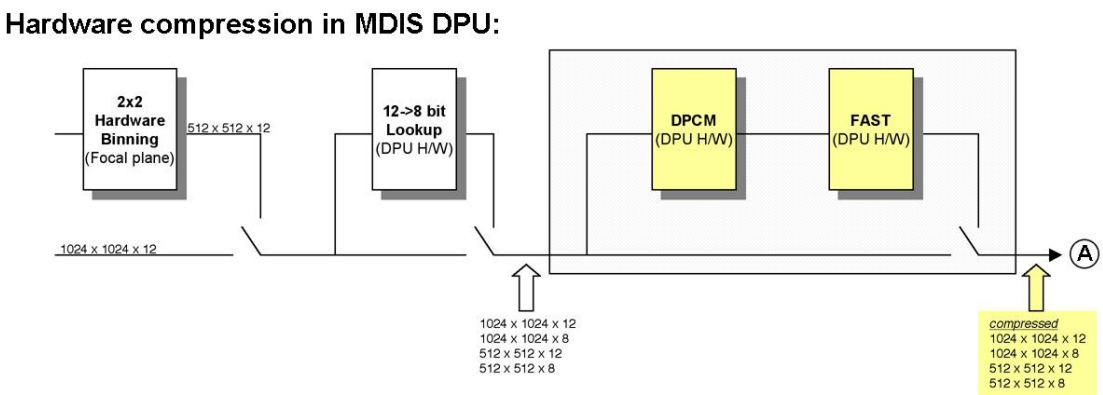

Figure 2-5a: MDIS/DPU Real-time Compression flowchart.

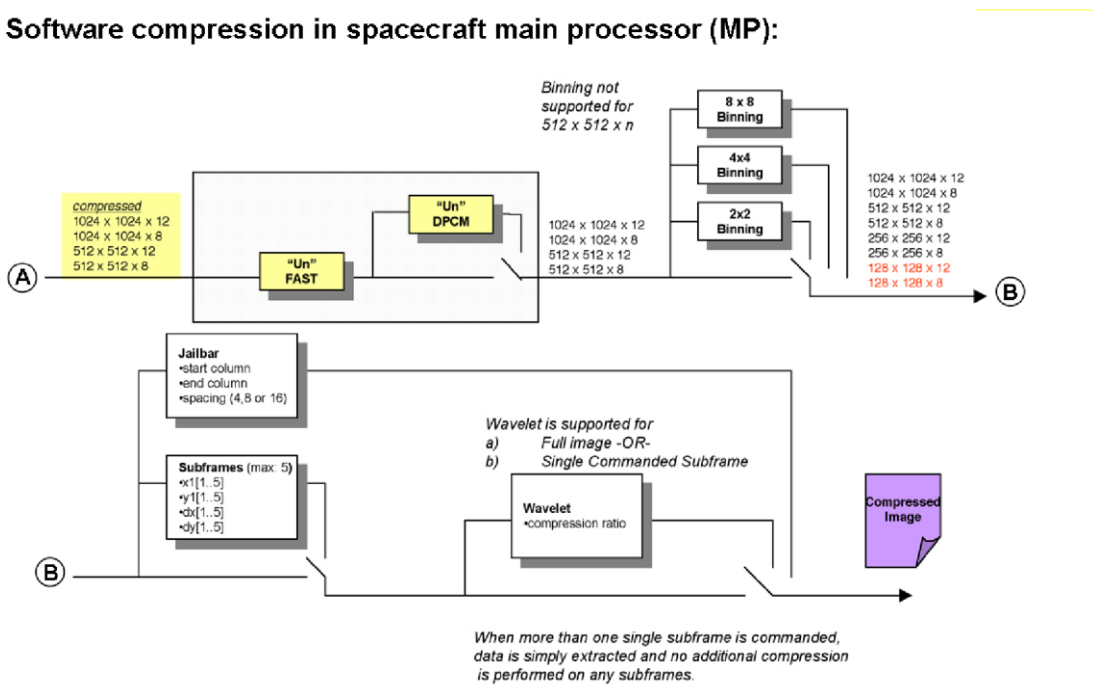

Figure 2-5b: MESSENGER Main Processor (MP) image post-processing compression flowchart.

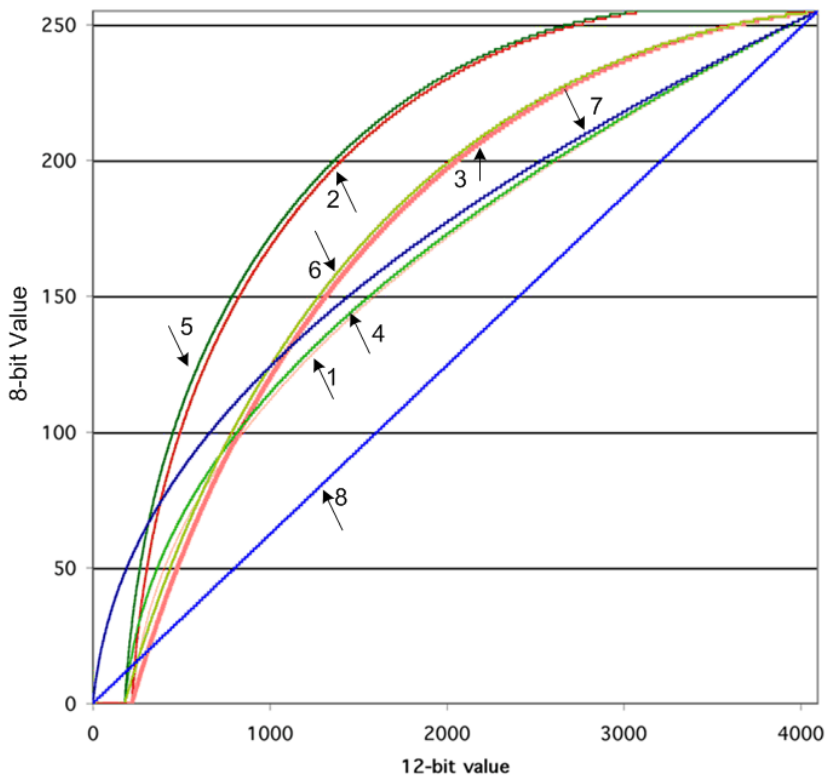

Figure 2-6: Mapping of 12 bits to 8 bits will be accomplished using onboard look-up tables. The tables are designed to preferentially preserve information at different DN ranges, and they can accommodate a nominal detector dark level as well as one that has changed with time. "Noise" refers to the read noise, which is "low" (1 12-bit DN) for the WAC CCD and "high" (2 12-bit DNs) for the NAC CCD. (1) Low noise, high bias SNR proportional. Usage: Typical imaging with varied brightness. Nominal for most imaging. (2) Low noise, high bias DN-weighted SNR proportional. Usage: Faint object imaging. (3) High noise, high bias DN-weighted SNR proportional. Usage: B/W, low brightnesses. Nominal for NAC imaging. (4) Low noise, medium bias SNR proportional. (5) Low noise, medium bias DN-weighted SNR proportional. Usage: Faint objects. (6) High noise, medium bias DN-weighted SNR proportional. Usage: B/W mostly low brightness. (7) Zero-bias SNR proportional. Usage: Typical imaging, varied brightness. (8) Linear. Usage: High brightness mapping, preserves high DN information.

2.1.4 Exposure Control

The exposure time of images can be set manually by command or automatically by the software. In manual mode, a full 9989 ms range of exposure times is available. In automatic mode, the exposure time of the next image is computed by the DPU software (Fig. 2-7). This computation has two distinct steps. The first step computes a new exposure time based on the brightness of a test image. The second step anticipates filter wheel motions and adjusts the computed exposure time accordingly.

During the read stage of the image pipeline, the hardware generates a histogram of the image. The histogram is analyzed by the software to determine if the image is overexposed or underexposed. First, the histogram is scaled by a factor of four if it comes from a 2×2 binned image. If the brightest histogram value (except for a commandable number of allowable saturated pixels) exceeds a saturation threshold, the image is considered overexposed and the exposure time is scaled back. Otherwise the image is considered underexposed. Histogram

values are accumulated starting from the brightest bin down towards the dimmest bin, until the saturation threshold is exceeded. The brightness value that causes the sum to exceed the threshold is the actual image brightness. The exposure time is scaled by the ratio of the commanded target brightness to the actual brightness, after a background brightness is removed. The algorithm is characterized by uploadable parameters for the saturation threshold, allowable number of saturated pixels, overexposure fallback, and background brightness.

The algorithm described so far compensates for changes in scene brightness and filter wheel changes. The next step adjusts the exposure time further if the imager, binning mode, or filter selected for the next exposure does not match what was used in the test exposure. The exposure time is scaled by the ratio of the transmissivity (actually, the expected brightness in DN/s) of the old setup to the transmissivity of the new setup. An uploadable table of transmissivities for the WAC filters and for the NAC imager in either binning mode are used. Finally, the computed exposure time is forced to fall within an uploadable range but is always less than 1 second.

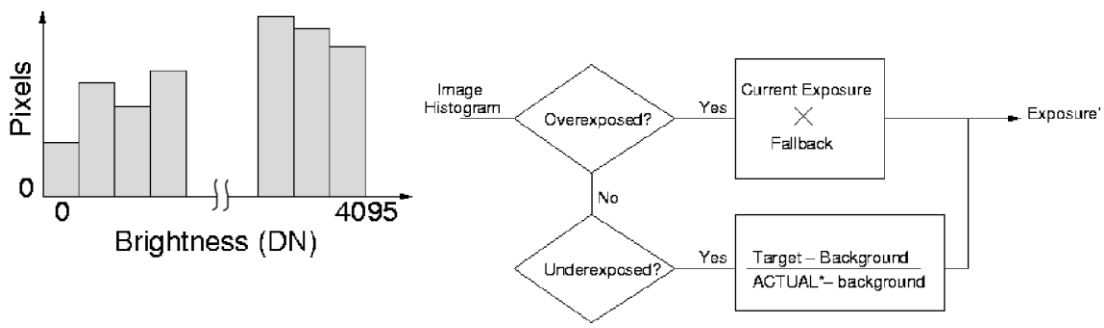

Anticipation:

$$\text{Exposure''} = \text{Exposure'} \times \frac{\text{Transmissivity(previous camera, bin mode, filter)}}{\text{Transmissivity(current camera, bin mode, filter)}}$$

Figure 2-7: Autoexposure algorithm decision tree. A 64-bin histogram is computed in hardware for each image. If an image is determined to be underexposed, the actual exposure is computed as Actual = minimum brightness such that the sum of the pixels above this brightness < saturation threshold.

2.1.5 Optical Design

The WAC (Figure 2-8) consists of a 4-element refractive telescope having a focal length of 78 mm and a collecting area of 48 mm^2 (Table 2-9). The detector located at the focal plane is an Atmel (Thomson) TH7888A frame-transfer CCD with a 1024×1024 format and 14-µm pitch detector elements that provide a 179-µrad pixel (instantaneous) field-of-view (IFOV). See Appendix J for the Atmel TH7888A data sheet. A 12-position filter wheel provides color imaging over the spectral range of the CCD detector. Eleven spectral filters spanning the range from 395 to 1040 nm are defined to cover wavelengths diagnostic of different potential surface materials. The twelfth position is a broadband filter for optical navigation. The filters are arranged on the filter wheel in such a way as to provide complementary passbands (e.g., for 3-color imaging, 4-color imaging) in adjacent positions.

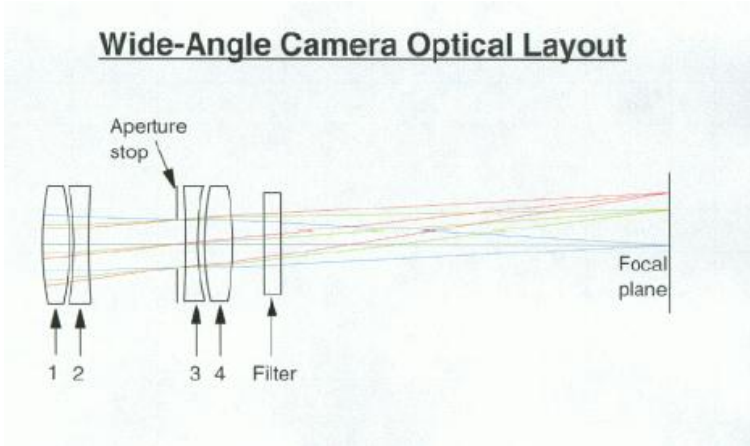

Figure 2-8: WAC optical layout.

	Narrow Angle	Wide Angle
Field of view	1.5° × 1.5°	10.5° × 10.5°
Pivot range (observational)	-40° to +50° (Sunward) (Planetward)	
Exposure time	1 to 9989 ms	
Frame transfer time	3.4 ms	
Image readout time†	1 s	
Spectral filters	1	12 positions
Spectral range	725–783 nm	395–1040 nm in clear filter
Focal length	550 mm	78 mm
Collecting area	462 mm²	48 mm²
NAC-WAC coalignment knowledge	<0.01 deg (<179 µrad)	
Spacecraft pointing control	<0.1 deg (<1.75 mrad)	
Spacecraft pointing knowledge	0.02 deg (<350 µrad)	
Detector-TH7888A	CCD 1024×1024, 14-µm pixels	
IFOV	25 µrad	179 µrad
Pixel FOV	5.1 m at 200-km altitude	35.8m at 200-km altitude
Quantization	12 bits per pixel	
Compression	Lossless, multi-resolution lossy, 12-to-8 bits	

†Transfer to DPU; transfer from DPU to SSR limited to 3 Mbps (4 s to transfer 1024×1024 image).

Table 2-9: MDIS specifications.

The NAC (Figure 2-10) is an off-axis reflective telescope with an effective 550-mm focal length and a collecting area of 462 mm^2. The NAC focal plane is identical to the WAC's, providing a 25-µrad IFOV. The NAC has a single medium-band filter (50 nm wide), centered at 750 nm to match to the corresponding WAC filter for monochrome imaging.

Narrow-Angle Camera Optical Layout

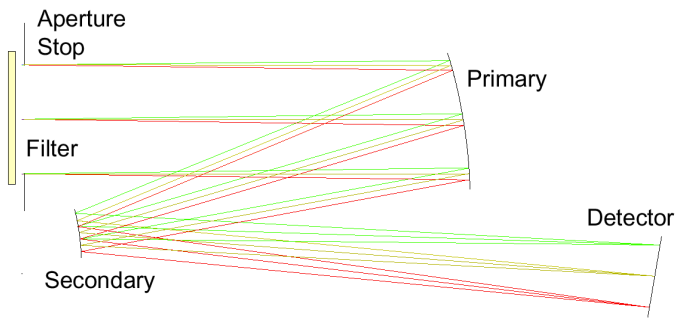

Figure 2-10: NAC optical layout.

2.1.6 Filters

The WAC camera utilizes a twelve position filter wheel with bandpasses from 430 to 1020 nm, including a broadband navigation filter centered at 750 nm. The NAC is a broadband BW imager with a center wavelength of 747 nm and a bandpass of 53 nm. Other than the image dimensions, the data products of each camera are identically formatted. Table 2-9 shows the design-level focal length, collecting area, and field of view for each camera. Table 2-11 shows the calibrated filter wheel position and bandwidth parameters, and the design-level focal lengths for each filter. More accurate values for focal lengths are derived from flight measurements, and are updated over the course of the mission as knowledge of the values improves.

Filter Number	Filter Filename letter	Wavelength (Flight) (nm)	FWHM (Flight) (nm)	Total Thickness (mm)	Focal length (mm)	Scale change (%)
1	A	698.8	5.3	6.00	78.218	-0.104
2	B	700	600.0	6.00	78.163	-0.104
3	C	479.9	10.1	6.30	77.987	-0.329
4	D	558.9	5.8	6.30	78.023	-0.283
5	E	628.8	5.5	6.20	78.109	-0.173
6	F	433.2	18.1	6.00	78.075	-0.216
7	G	748.7	5.1	5.90	78.218	-0.033
8	H	947.0	6.2	5.20	78.449	0.262
9	I	996.2	14.3	5.00	78.510	0.340
10	J	898.8	5.1	5.35	78.390	0.186
11	K	1012.6	33.3	4.93	78.535	0.372
12	L	828.4	5.2	5.60	78.308	0.082

Table 2-11: WAC Filters Specifications – Wavelength and FWHM Measured at -26° C.

For WAC spectral filters, bandpass widths were selected to provide required SNR in exposure times sufficiently short to prevent linear smear by along-track motion, yet sufficiently long (>7 ms) to avoid excessive artifacts from removal of frame transfer smear during ground processing. SNR is not an issue, as sufficient light is available for SNRs >200, but saturation is a concern at

low phase angles. At the same time, both cameras must be sufficiently sensitive to provide star images for optical navigation. When imaging Mercury against a star background, at least three stars must be visible per image at ≥ 7× noise with the clear filter.

2.1.7 Flatfield Non-uniformity

Response uniformity, or flat field, is a measure of pixel-to-pixel variations in responsivity. One significant non-uniformity in the data noted during ground calibration is that of dark spots scattered across the FOV of both imagers. The darker spots scattered across WAC images are fixed with respect to the CCD regardless of filter wheel setting, though their intensities do vary slightly with filter. The sizes of the spots are consistent with shadows of <<35-µm dust on the CCD window, and their number density is consistent with the standards for a class-10,000 clean room in which the camera was assembled. Also consistent with this hypothesis, following instrument vibration during environmental testing, the locations of several spots changed. With the exception of a single particle (arrow, Figure 2-12) the dust spots do not significantly affect the DN levels. The spots themselves also moved as the instrument was subjected to the vibrations of launch and flight. Images of an onboard calibration target inside the spacecraft adaptor ring as well as of the Venus cloud tops acquired during the second Venus flyby have been used to re-determine the flat field post-launch.

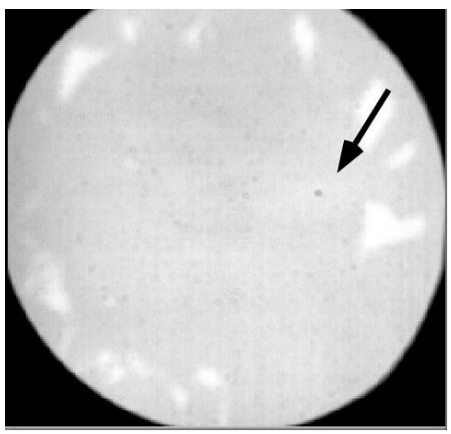

Figure 2-12: Non-uniformity due to dust particles is visible in integrating sphere images acquired through the quartz window in the OCF chamber door of the calibration facility.

To reduce noise in the derived flat field to approximately 10^{-3}, ~10 images have to be averaged together per filter, camera, and binning mode. When the images are dark-subtracted, de-smeared, averaged, and normalized to the image mean, the relative DN levels are nearly identical on a pixel-by-pixel basis.

2.1.8 Dark Columns

Dark models for MDIS images are created using either (a) dark images (usually acquired with MDIS stowed against the spacecraft deck) or (b) columns lying outside of the CCD's active area. In the full-frame mode for either the WAC or NAC, the first four columns of each image are taken from a region of the CCD that is never exposed to light and, thus, represents a dark level that is purely a function of bias and dark current. The dark columns are separated from the

image section by five isolation columns to avoid diffusion of signal from the active area. When the image is read out, these four columns are mapped into the first four imaging columns, so the resulting image is a square 1024 by 1024 pixels, with the first four columns replaced with the sampled dark columns. The four dark columns behave identically to the scene as a function of row, exposure time, and temperature to within 0.26 DN.

In the binned mode for both cameras, true dark columns are unavailable. However, the second column of a binned image provides a lower response than a column in the active image area. This lower-response column does show a temperature- and exposure-time response that can be modeled, making it a functional "dark." Therefore, the dark column model simply uses the second column of an image (binned or full-frame) to be a representative of the dark strip properties.

Given the nature of the binned "dark" columns, it is tempting to rely on model (a) above exclusively, rather than dark current calibration images. However, the dark strips, even for binned data, serve as an indicator of the variations of the CCD's response to radiation, and, as such, a means to calibrate the changes in the behavior of the CCD with time. Thus, both dark models will be periodically re-evaluated en route to Mercury and during the orbital phase of the mission.

2.1.9 Pixel Shift Due to Pixel Binning

For either camera, an error in programming the Actel field-programmable gate arrays (FPGAs) that executes binning at the focal plane results in a different sampling of the CCDs. Binned images are sampled from a part of the CCD that is offset 8 unbinned pixels (4 binned pixels) in the direction of increasing sample number in the image. This difference in pointing is accounted for in the SPICE frames kernel.

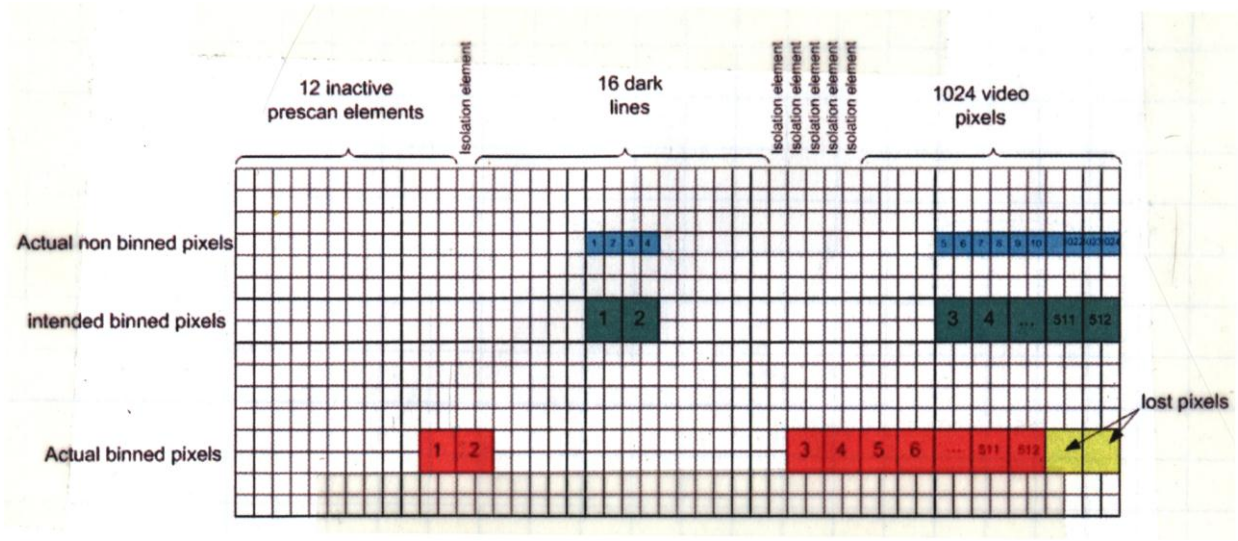

Figure 2-13: Pixels intended for dark columns, and actual pixels used in binned images for WAC and NAC.

2.2 Flyby Imaging Overview

The MESSENGER trajectory provided three flyby opportunities of Mercury: January 2008, October 2008, and September 2009. During the first flyby, approximately half of the hemisphere not viewed by Mariner 10 was illuminated (subsolar longitude 190°E); the first Mercury data returned from MESSENGER thus covered new terrain, including the previously unseen western half of the Caloris Basin and its ejecta. During the second flyby, illumination was centered on the eastern edge of the Mariner 10 hemisphere (subsolar longitude 4°E). The lighting geometry for the third encounter was nearly identical to that of the second encounter with the subsolar point at the prime meridian (0°E); the approach and departure phase angles were less extreme, however, resulting in better inbound imaging. During the second and third flybys, most of the remaining unseen portion of Mercury was imaged. Total coverage between Mariner 10 and the three flybys excluded only the poles and a small longitudinal gap up to 6° wide, centered at 93°E longitude.

During each of the flybys, three major types of image mosaics were acquired. First, MDIS-NAC raster scan mosaics covered >80% of the planet at a resolution averaging ~500 m/pixel, providing a first version of a global map. Second, MDIS-WAC imaged the planet in 11 filters at as good as ~2.4 km/pixel. Finally, high-resolution WAC and NAC mosaics covered selected areas at higher resolutions.

Creating maps from imaging obtained at various photometric geometries during the flybys and from orbit requires an accurate photometric model of the planet at the wavelengths of the NAC and WAC filters. Therefore, MESSENGER began the collection of multi-geometry photometric characterization of Mercury's surface from data acquired during the flybys, through observations of the same point on the ground acquired at the same incidence angle, but different emission and phase angles.

2.3 Orbital Imaging Overview

Imaging during the orbital phase is divided into two types, acquired as parts of organized mapping "campaigns", and "targeted observations" covering regions of interest specifically defined by the Science Team. In the latter case the region of interest is recorded by the SITE_ID keyword.

2.3.1 Primary Mission

On 18 March 2011 MESSENGER was placed in a highly elliptical orbit with a periapse of 200 km at ~64˚N and an apoapse of 13100 km. The orbit had an approximately 12-hour period, was inclined 80˚ to the planet's equatorial plane, and was not sun-synchronous. During one Mercurian solar day, the orbit precessed completely around the planet twice. At times the groundtrack was near the terminator; 22 days later it passed over the sub-solar point. The following were the major imaging campaigns during the ~1 Earth year primary mission.

2.3.1.1 Global Monochrome Basemap Campaign

One of the primary goals of MDIS is to acquire a global monochrome basemap at ~250-m/pixel average spatial sampling, low emission angle, and moderate incidence angle (45˚-80˚). For a given area, coverage was first obtained when local nadir was viewed at a solar incidence angles as close as possible to 68°. This value is a compromise between higher incidence angles to

highlight subtle topography and lower incidence angles to eliminate shadows. The choice of the NAC or WAC camera was driven by the necessity of maintaining both cross-track overlap and near uniform spatial resolution: the NAC was used to image the southern hemisphere, whereas the WAC was used in the northern hemisphere. For monochrome imaging, the 750 nm filter was used in the WAC to match the 750 nm bandpass of the NAC. This first global nadir-viewing basemap was acquired during the first Mercurian solar day of the mission (i.e., during the first half of the primary mission).

2.3.1.2 Stereo Mapping Campaign

The off-nadir stereo-complement to the above basemap consists of images taken at nearly the same local solar time one solar day later, with stereo convergence attained using off-nadir pointing up or down the groundtrack. The stereo complement was acquired on solar day two (i.e., the second half of the primary mission).

2.3.1.3 Global 8-Color Mapping Campaign

Color mapping was repeated after the flybys, improving spatial resolution by nearly a factor of 3 to 1.0 km/pixel on average. Images were acquired using near-nadir pointing, but in contrast to the monochrome basemap, low incidence angles were targeted. The data were acquired in only 8 of the 11 filters used during the flybys, to manage data volume. In addition, 2x2 or 4x4 pixel-binning was applied at northern latitudes, also to manage data volume.

2.3.1.4 South Polar Mapping Campaign

In order to identify permanently shadowed (and permanently illuminated) areas, the south polar region was imaged repeatedly throughout each Mercurian solar day during every fourth orbit, so that all longitudes were illuminated at ~5˚ increments of solar longitude. This strategy provides coverage of all areas near their minimum solar incidence angle, with nearly a full 180° range of solar azimuth from local sunrise to local sunset. The campaign was divided between the two solar days. On the first solar day, the WAC was used while the spacecraft was at high altitude at high southern latitude, providing 1.5-1.7 km/pixel image coverage extending equatorward to approximately 60˚ latitude on the dayside (70° latitude with the full azimuth range). On the second solar day a more limited region to 75° latitude was covered at about 300 m/pixel using the NAC.

2.3.1.5 High-resolution NAC Targeted Observations

Selected areas of the northern hemisphere, targeted for the most parts using flyby imaging, were imaged from orbit at resolutions of typically ~20 m/pixel using strips of NAC images. Pointing was attempted to be similar to that for the global monochrome basemap. Some strips were re-imaged at an off-nadir geometry to provide stereo convergence. Additional targets were observed, usually off-nadir, at poorer resolutions and with lower incidence angles, simultaneously with measurements from the MASCS/VIRS spectrometer.

2.3.1.6 3-Color WAC Targeted Observations

Selected regions of the planet were targeted with full-resolution color imaging with spatial sampling typically ~400 m/pixel, but using only 3 color filters. The reduced number of filters was driven by spacecraft velocity, slower cadence of readout of unbinned images, and the need to maintain overlap between filters. Targets were identified from Mariner 10 data and MESSENGER flyby results.

2.3.1.7 Color Photometry Targeted Observations

Orbital photometric observations complement the flyby photometry by repeatedly covering

representative areas near the Rembrandt and Beethoven basins at wide variety of incidence, emission, and phase angles, initially using the same 8-color filter set as for the global 8-color map. Images of the same target are taken multiple times, as the planet's rotation varies the incidence angle as the target region moves from the terminator to near the sub-solar longitude. Later in the mission the number of filters was increased to 11 to improve photometric correction of 11-color targeted observations.

2.3.1.8 Limb Image Campaign

Once per week, three sets of 2x1 frame WAC 750-nm image mosaics are acquired at high altitudes, showing the entire limb of Mercury. These data are used to help define the low-order global shape model for Mercury.

2.3.1.9 On-orbit Calibration Campaigns

Star fields were imaged in the WAC clear filter in coordination with limb imaging, to track temporal drift in MDIS pointing due to plastic deformation of the spacecraft from thermal cycling. In addition, periodically the MDIS pivot plane is pointed off the planet's limb and star images acquired at multiple positions within the gimbal plane that are separated by tens of degrees, and the sequence of positions is repeated over the course of an orbit. This periodic measurement is used to characterize pointing drift due to temperature dependent elastic deformation of the spacecraft structure, as well as to characterize plastic deformation.

2.3.2 Extended Mission 1

In April 2012 MESSENGER executed a series of maneuvers to change the orbit and spend more time at lower altitude. The new 8-hour orbit was still highly eccentric, with MESSENGER travelling between 278 and 10,314 km above Mercury's surface. Imaging campaigns were modified to take advantage of the lower altitude and to optimize illumination and viewing compared to the "general purpose" monochrome basemap and stereo complement from the primary mission. The extended mission comprises Mercury solar days 3 and 4, through the end of March 2013.

2.3.2.10 Albedo Map and Stereo Complement Campaigns

One issue from the primary mission stereo map was its "one size fits all" illumination geometry which attempted to meet multiple objectives. In order to attain stereo coverage with reduced shadows, a new pair of mosaics was acquired that used the camera selection and spatial resolution strategy from the primary mission monochrome basemap, but targeted lower solar incidence angles, 45° instead of 68°. The nadir mosaic was acquired on solar day 3, and the stereo complement on day 4. Gaps in both were filled over time.

2.3.2.11 High-incidence Mapping Campaign

To improve mapping and characterization of very low-relief features, an additional mosaic was acquired targeting a higher incidence angle than the primary mission monochrome basemap, 80° instead of 68°. Later coverage was augmented to provide separate maps illuminated from the east and from the west.

2.3.2.12 3-Color Mapping Campaign

3-color mapping of northern and equatorial latitudes without pixel binning was conducted on solar day 3. This campaign is the equivalent of targeted color imaging from the primary mission, except with spatially continuous coverage with slowly varying illumination geometries.

2.3.2.13 North Polar Mapping Campaign

In order to identify permanently shadowed (and permanently illuminated) areas, during both solar days 3 and 4 imaging of the north polar region was conducted whenever possible to build coverage both at minimum solar incidence angle and with as large as possible a range of solar azimuths.

2.3.2.14 Ride-along Imaging Campaign

Beginning in Extended Mission 1, spare downlink was used to acquire non-targeted, high-resolution NAC images of the northern hemisphere, as "ride-along" observations during times when spacecraft pointing is optimized for other instruments.

2.3.2.15 Other Imaging

Targeted, high-resolution NAC strips, color photometry, limb images, and on-orbit calibrations continued to be acquired as during the primary mission. Regular color imaging of the southern polar region began to be used to monitor radiometric performance of the WAC.

2.3.3 Extended Mission 2

At the end of March 2013 MESSENGER began its second extended mission, with new imaging campaigns complementing those of the Primary Mission and Extended Mission 1. The orbit around Mercury remained largely the same initially, but solar perturbations caused the periapse to approach the surface. In December 2013 the first of several low altitude (<200 km) periapse periods occurred. Each was followed by a periapse-raising maneuver. Once propellant has been exhausted, the periapse will intersect the surface, and collection of new data will cease upon spacecraft impact in March 2015. Imaging campaigns provide new regional views, new global views at complementary lighting, and high-resolution observations at pixel scales as good as <2 m/pixel in the NAC.

2.3.3.1 High-incidence Mapping Campaigns, Illuminated from the East and West

The high-incidence mapping from Extended Mission 1 included about a dozen large contiguous areas illuminated at high solar incidence angle from either the east or west. During the second extended mission, additional coverage at high solar incidence angle was acquired so that nearly global coverage was attained in two nearly complete, complementary global maps each at high solar incidence angles, one illuminated from the east and the other from the west.

2.3.3.2 Low-phase North Polar 5-Color Mapping Campaign

Both the 8-color global map acquired during the Primary Mission and the 3-color map acquired during Extended Mission 1 are mostly nadir-viewing, such that higher latitudes are imaged at higher phase angles. In each polar region, the high phase angles and extended shadows complicate the recognition of color variations. The northern plains surrounding the north pole are the single largest expanse of smooth plains on Mercury, and have a relatively high albedo and red color. It is unclear due to limitations of the 8-color and 3-color maps whether there are multiple color units. To address this question, the northern plains region was imaged in 5 colors at a variable angle off-nadir, to attain a uniform low phase angle near 30°.

2.3.3.3 Along-track Stereo Targeted Observations

Prior to Extended Mission 2, high-resolution stereo imaging with the NAC was mostly limited to image strips taken far apart in time at complementary geometries, yielding inconsistent stereo convergence. A new approach uses control of spacecraft pointing to acquire stereo geometries at two times along the spacecraft groundtrack on a single orbit, providing spatial sampling typically

better than 50 m/pixel.

2.3.3.4 Dark-crater Imaging Campaigns

Beginning late in Extended Mission 1 and continuing through Extended Mission 2, the WAC clear filter and long exposures in the NAC were used to image permanently shadowed regions inside high-latitude craters, illuminated indirectly by sunlight reflected from nearby ridges or crater walls. As of mid-2014, 3-color imaging using 560, 750, and 830 nm filters and longer exposure times began on an experimental basis.

2.3.3.5 11-color Targeted Observations

Beginning in Extended Mission 2, 11-color targets using the full set of WAC spectral filters were acquired covering regions of interest for their spectral variations, including pyroclastic vents, hollows, and fresh crater materials.

2.3.3.6 Multiple-phase Angle Observations

Beginning in Extended Mission 2, 3-color targets using 430-, 750-, and 1000-nm WAC spectral filters at 2 to 5 phase angles were acquired within single orbits or groups of two orbits, to measure spatial differences in photometric properties of targets including pyroclastic vents, hollows, and fresh crater materials.

2.3.3.7 Low Flyover Movie

During Extended Mission 2, at least one "movie" was acquired using the WAC 750-nm filter pointed into the ram direction to capture a view of flying over Mercury's surface at a low altitude.

2.3.3.8 Other Imaging

High-resolution NAC strips, color photometry, color imaging of the south polar region, limb images, and on-orbit calibrations continued to be acquired as during the first extended mission.

2.4 Data Product Overview

The MDIS archive is composed of ten higher-level data sets: CDRs, DDRs, BDRs, MDRs, MD3s, MP5s, HIEs, HIWs, LOIs, and RTMs each briefly described below and listed in Table 2-14. More detailed descriptions can be found in sections 3.3.5 through 3.3.14.

2.4.1 CDRs

The Calibrated Data Record (CDR) data set consists of single-frame calibrated images in units of radiance, I/F, or reflectance at i = 30º, e = 0º, g = 30º as 32-bit PC_REAL or IEEE_REAL. CDRs are not geometrically corrected. See section 3.3.5 for a more detailed description of the CDRs.

2.4.2 DDRs

The Derived Data Record (DDR) data set consists of single images that have 5 bands of data as 32-bit PC_REAL or IEEE_REAL: (a) latitude, (b) longitude, (c) incidence angle, (d) emission angle, and (e) phase angle. See section 3.3.6 for a more detailed description of the DDRs.

2.4.3 BDRs

The Map Projected Basemap RDR (BDR) data set consists of a global monochrome map of reflectance corrected to i = 30º, e = 0º, g = 30º at a resolution of 256 pixels per degree, compiled

from images taken as a part of the global monochrome basemap campaign described in section 2.3.1.1. The map is divided into 54 segments or "tiles," each representing the NW, NE, SW, or SE quadrant of one of the 13 non-polar and 2 polar quadrangles or "Mercury charts" already defined by the USGS (see Table 3-10). Latitude boundaries do not match precisely the USGS definition. For this archive, the equirectangular products extend to the shared midpoint latitude rather than include the defined redundant overlap between those products. Each map also contains 5 additional bands representing "backplane" data as follows: (a) observation id, (b) BDR metric, a metric used to determine the stacking order of component images (see section 2.5.2.3), (c) solar incidence angle, (d) emission angle, and (e) phase angle. See section 3.3.7 for a more detailed description of the BDRs.

2.4.4 MDRs

The 8-color Map Projected Multispectral RDR (MDR) data set consists of an uncontrolled, mosaicked global color map of 8-color image sets, as reflectance corrected to i = 30º, e = 0º, and g = 30° sampled at a scale of 64 pixels per degree, compiled from images taken as a part of the global 8-color map campaign described in section 2.3.1.3. Each of 54 map tiles, defined geographically in the same manner as the BDRs, is composed of 8 bands corresponding to 8 of the 11 WAC filters. Each map also contains 5 additional bands representing "backplane" data as follows: (a) observation id, (b) MDR metric, a metric used to determine the stacking order of component images (see section 2.5.2.3), (c) solar incidence angle, (d) emission angle, and (e) phase angle. See section 3.3.8 for a more detailed description of the MDRs.

2.4.5 MD3s

The 3-color Map Projected Multispectral RDR (MD3) data set consists of an uncontrolled, mosaicked global color map of 3-color image sets, as reflectance corrected to i = 30º, e = 0º, and g = 30º sampled at a scale of 128 pixels per degree, compiled from images taken as a part of the regional 3-color map campaign described in section 2.3.2.3. Each map tile, defined geographically in the same manner as for BDRs and MDRs, contains 3 bands corresponding to 3 of the 11 WAC filters. Each map tile also contains 5 additional bands representing "backplane" data as follows: (a) observation id, (b) the same metric as for MDRs, to determine the stacking order of component images (see section 2.5.2.3) except with the limiting spatial resolution modified, (c) solar incidence angle, (d) emission angle, and (e) phase angle. See section 3.3.9 for a more detailed description of the MD3s.

2.4.6 MP5s

The 5-color Map Projected Multispectral RDR (MP5) data set consists of an uncontrolled, mosaicked global color map of 5-color image sets, as reflectance corrected to i = 30º, e = 0º, and g = 30° sampled at a scale of 128 pixels per degree, compiled from images taken as a part of the regional 5-color map campaign described in section 2.3.3.2. Each map tile, defined geographically in the same manner as for MD3s, contains 5 bands corresponding to 5 of the 11 WAC filters. Each map tile also contains 5 additional bands representing "backplane" data as follows: (a) observation id, (b) the same metric as for MDRs, to determine the stacking order of component images (see section 2.5.2.3) except with the limiting spatial resolution modified as with MD3s, (c) solar incidence angle, (d) emission angle, and (e) phase angle. See section 3.3.10 for a more detailed description of the MP5s.

2.4.7 HIEs

The Map Projected High-Incidence Angle Basemap Illuminated from the East RDR (HIE) data set consists of a global monochrome map of reflectance corrected to i = 30º, e = 0º, and g = 30° at a resolution of 256 pixels per degree, compiled from images taken as a part of the global high-incidence angle imaging campaign illuminated from the east, described in section 2.3.3.1. Each map tile, defined geographically in the same manner as for BDRs, contains a single band that merges NAC and WAC 750-nm images. Each map also contains 5 additional bands representing "backplane" data as follows: (a) observation id, (b) the same metric as for BDRs, to determine the stacking order of component images (see section 2.5.2.3), modified for the optimal incidence angle to be 78° instead of 68°, (c) solar incidence angle, (d) emission angle, and (e) phase angle. See section 3.3.11 for a more detailed description of the HIEs.

2.4.8 HIWs

The Map Projected High-Incidence Angle Basemap Illuminated from the West RDR (HIW) data set consists of a global monochrome map of reflectance corrected to i = 30º, e = 0º, and g = 30° at a resolution of 256 pixels per degree, compiled from images taken as a part of the global high-incidence angle imaging campaign illuminated from the west, described in section 2.3.3.1. Each map tile, defined geographically in the same manner as for BDRs, contains a single band that merges NAC and WAC 750-nm images. Each map also contains 5 additional bands representing "backplane" data as follows: (a) observation id, (b) the same metric as for BDRs, to determine the stacking order of component images (see section 2.5.2.3), modified for the optimal incidence angle to be 78° instead of 68°, (c) solar incidence angle, (d) emission angle, and (e) phase angle. See section 3.3.12 for a more detailed description of the HIWs.

2.4.9 LOIs

The Map Projected Low-Incidence Angle Basemap RDR (LOI) data set consists of a global monochrome map of reflectance corrected to i = 30º, e = 0º, and g = 30° at a resolution of 256 pixels per degree, compiled from images taken as a part of the global low-incidence angle imaging campaign described in section 2.3.2.1. Each map tile, defined geographically in the same manner as for BDRs, contains a single band that merges NAC and WAC 750-nm images. Each map also contains 5 additional bands representing "backplane" data as follows: (a) observation id, (b) the same metric as for MDRs, to determine the stacking order of component images (see section 2.5.2.3) except with the limiting spatial resolution modified to be the same as for BDRs, (c) solar incidence angle, (d) emission angle, and (e) phase angle. See section 3.3.13 for a more detailed description of the LOIs.

2.4.10 RTMs

The Regional Targeted Mosaic RDR (RTM) data set consists of regional maps of reflectance corrected to i = 30º, e = 0º, g = 30° at resolutions optimized to each mosaic, compiled from images taken as a part of targeted NAC strips or targeted WAC color observations. These include 4 types of targeted observations: (a) high-resolution NAC strips as described in section 2.3.1.5, (b) 3-color WAC targets as described in section 2.3.1.6, (c) 8- or 11-color WAC photometry targets as described in section 2.3.1.7, and (d) 11-color WAC targets as described in section 2.3.3.5. Each map is projected orthographically centered on the mid-point of the target, and contains 1, 3, 8, or 11 image bands depending on the type of observation (NAC or WAC 3-, 8-,

or 11-color targeted observation). Each NAC mosaic also contains 4 additional bands representing "backplane" data as follows: (a) observation id, (b) solar incidence angle, (c) emission angle, and (d) phase angle. Each WAC color product contains 3 backplanes: (a) solar incidence angle, (b) emission angle, and (c) phase angle. If the observation is a WAC color observation, the additional bands are evaluated for the 750-nm filter. See section 3.3.14 for a more detailed description of the RTMs.

Data Product	PDS Data Set ID	Data Processing Level	Example PDS Labels
Experiment Data Record (EDR)	MESS-E/V/H-MDIS-2-EDR-V1.0	2	See EDR SIS
Calibrated Data Record (CDR)	MESS-E/V/H-MDIS-4-CDR-CALDATA-V1.0	4	Section 3.3.5 Appendix C
Derived Data Record (DDR)	MESS-E/V/H-MDIS-6-DDR-GEOMDATA-V1.0	6	Section 3.3.6 Appendix D
Map Projected Basemap RDR (BDR)	MESS-H-MDIS-5-RDR-BDR-V1.0	5	Section 3.3.7 Appendix E
8-Color Map Projected Multispectral RDR (MDR)	MESS-H-MDIS-5-RDR-MDR-V1.0	5	Section 3.3.8 Appendix F
3-Color Map Projected Multispectral RDR (MD3)	MESS-H-MDIS-5-RDR-MD3-V1.0	5	Section 3.3.9 Appendix G
5-Color Map Projected Multispectral RDR (MP5)	MESS-H-MDIS-5-RDR-MP5-V1.0	5	Section 3.3.10 Appendix H
Map Projected High-incidence Angle Basemap Illuminated from the East RDR (HIE)	MESS-H-MDIS-5-RDR-HIE-V1.0	5	Section 3.3.11 Appendix I
Map Projected High-incidence Angle Basemap Illuminated from the West RDR (HIW)	MESS-H-MDIS-5-RDR-HIW-V1.0	5	Section 3.3.12 Appendix J
Map Projected Low-incidence Angle Basemap RDR (LOI)	MESS-H-MDIS-5-RDR-LOI-V1.0	5	Section 3.3.13 Appendix K
Map Projected Regional Targeted Mosaic RDR (RTM)	MESS-H-MDIS-5-RDR-RTM-V1.0	5	Section 3.3.14 Appendix L

Table 2-14: Definitions of MDIS data products. EDRs are not described in this document.

2.5 Data Processing

2.5.1 Data Processing Level

Data from the MESSENGER WAC and NAC are archived together. The archive includes level 2 (and above) Committee on Data Management and Computation (CODMAC) data (Table 2-15), standard data products, and documentation describing the generation of the products. Each MDIS data product has a unique file name and follows a specified file naming convention (see section 3.3).

NASA	CODMAC	Description
Packet data	Raw - Level 1	Telemetry data stream as received at the ground station, with science and engineering data embedded.
Level-0	Edited - Level 2	Instrument science data (e.g., raw voltages, counts) at full resolution, time ordered, with duplicates and transmission errors removed.
Level 1-A	Calibrated - Level 3	Level 0 data that have been located in space and may have been transformed (e.g., calibrated, rearranged) in a reversible manner and packaged with needed ancillary and auxiliary data (e.g., radiances with the calibration equations applied).
Level 1-B	Resampled - Level 4	Irreversibly transformed (e.g., resampled, remapped, calibrated) values of the instrument measurements (e.g., radiances, magnetic field strength).
Level 1-C	Derived - Level 5	Level 1A or 1B data that have been resampled and mapped onto uniform space-time grids. The data are calibrated (i.e., radiometrically corrected) and may have additional corrections applied (e.g., terrain correction).
Level 2	Derived - Level 5	Geophysical parameters, generally derived from Level 1 data, and located in space and time commensurate with instrument location, pointing, and sampling.
Level 3	Derived - Level 5	Geophysical parameters mapped onto uniform space-time grids.
	Ancillary – Level 6	Data needed to generate calibrated or resampled data sets.

Table 2-15: Processing Levels for Science Data Sets.

2.5.2 Data Product Generation

MESSENGER WAC and NAC image CDRs and RDRs are produced by the MESSENGER Science Operations Center (SOC) operated jointly by APL and ACT. In some cases they are also generated by members of the MESSENGER science team. The CDRs are generated from EDRs through a data pipeline that corrects the EDRs for dark counts, flat field effects, bad pixels, and other similar effects.

At the end of the evaluation and validation period, the data are organized and stored in the directory structure described in section 3.3, along with fiduciary checksums for transmittal to the PDS Imaging node. The transmittal process is described in section 2.5.3. These products will be used for engineering support, direct science analysis, and construction of other science products.

2.5.2.1 CDR Generation

2.5.2.1.1 Radiance

Laboratory and in-flight measurements were used to derive values for the terms of the calibration equation (shown in Equation 1 below) for both the WAC and NAC. Details of how these measurements were made can be found in Hawkins et al. (2007) [Applicable Document 9]. Both

instruments measure relative light intensity in engineering units referred to as data number [DN]. DNs are generally converted to radiance, L (W m^{-2}-μm^{-1}-sr^{-1}), following the calibration equation:

$$\mathrm{L}(x, y, f) = \frac{[\mathrm{DN}(x, y, f, T, \tau, b, MET) - \mathrm{Dk}(x, y, T, \tau, b, MET)] - \mathrm{Sm}(x, y, \tau, b)}{\mathrm{Flat}(x, y, f, b) * [\mathrm{Resp}(f, T, b) / \mathrm{Correct}(f, MET)] * \tau} \qquad [1]$$

where:

L(x,y,f) is the calibrated radiance in column x, row y, through filter f

DN(x,y,f,T,τ,b,MET) is the raw DN measured by the pixel in column x, row y, through filter f, at CCD temperature T and exposure time τ, for binning mode b, and Mission Elapsed Time (MET),

Dk(x,y,T,τ,b,MET) is the dark level in a given pixel, derived either from the dark strip or estimated from exposure time and CCD temperature,

Sm(x,y,τ,b) is the scene-dependent frame transfer smear for the pixel,

Flat(x,y,f,b) is the non-uniformity or "flat-field" correction at this pixel location,

Resp(f,T,b) is the responsivity, relating dark-, flat-, and smear-corrected DN per unit exposure time to radiance,

Correct(f,MET) is a correction for time-dependent effects of contamination (WAC only), and

τ is the exposure time in milliseconds.

2.5.2.1.2 I/F CDRs

To convert from radiance to I/F (also known as radiance factor, the ratio of measured radiance to that which would be measured from a white perfectly Lambertian surface), which is used to populate CDRs, the following expression should be applied:

I_over_F(x,y,f) = L(x,y,f) * pi * (SOLAR_DISTANCE/149597870.691)^2 / F(f) [2]

where:

L(x,y,f) is calibrated radiance calculated as described above for some filter f,

SOLAR_DISTANCE is that value for distance of the target object from the center of the Sun in kilometers (as indicated by the keyword SOLAR_DISTANCE),

149597870.691 is the number of kilometers in 1 AU, and

F(f) is effective average solar irradiance at 1 AU sampled under the filter bandpass (Table 2-16).

Imager	Filter Number	Band Center, nm	Bandwidth, nm	Solar Irradiance, W m^{-2} μm^{-1}
NAC	N/A	747.70	52.55	1278.85
WAC	1	698.76	5.30	1429.10
	2	701.27	196.51	1432.13
	3	479.87	10.14	2091.95
	4	558.91	5.82	1833.26
	5	628.81	5.52	1669.08
	6	433.21	18.11	1733.07
	7	748.73	5.09	1293.93
	8	947.03	6.15	813.27
	9	996.23	14.30	741.46
	10	898.80	5.08	900.80
	11	1012.56	33.33	714.15
	12	828.39	5.20	1062.92

Table 2-16: Solar irradiance used to convert radiance to units of I/F.

2.5.2.2 DDR Generation

The sequence of processing that creates a DDR is as follows. Gimbal positions are extracted from the gimbal C kernel. Using that and other SPICE kernels, the equipotential surface intercept is calculated for each spatial pixel. The angles of this pixel relative to the equatorial plane and reference longitude constitute the latitude and longitude of the pixel. For that latitude and longitude, solar incidence, emission, and phase angles are determined.

2.5.2.3 BDR, MDR, MD3, MP5, HIE, HIW, LOI, and RTM Generation

The sequence of processing that creates a BDR, MDR, MD3, MP5, HIE, HIW, LOI, or RTM from CDRs and DDRs (Figure 2-17) is as follows:

(a) EDRs are assembled from raw data.

(b) Radiance images are created from the EDRs and calibration files.

(c) Radiance is converted to I/F CDRs by dividing by (pi * solar flux at 1 AU * heliocentricdistance^2).

(d) I/F is converted to reflectance through a photometric correction to i = 30º, e = 0º, g=30°.

(e) Gimbal positions are extracted from the spacecraft housekeeping and formatted as a gimbal C kernel.

(f) Using the gimbal C kernel and other SPICE kernels, DDRs are created. The surface intercept on Mercury's equipotential surface is calculated for each spatial pixel. The angles of this pixel relative to the equatorial plane and reference longitude constitute the latitude and longitude of the pixel. For that latitude and longitude, solar incidence, emission, and phase angles are determined.

(g) Reflectance corrected to i = 30º, e = 0º, g=30° from the WAC and/or NAC is map projected into multiband BDRs or MDRs using the latitude and longitude information in the DDRs. The same procedure is used on DDRs to assemble the backplanes with derived information.

Separate stacking orders ("which image is on top") have been defined for BDRs/HIEs/HIWs and for MDRs/MD3s/MP5s/LOIs. Which images were taken as part of the basemap or color mapping campaigns represented by these data products is indicated within an observation table used internally at the MESSENGER Science Operations Center.

For BDRs, the objective is to have “on top” those images with high spatial resolution, low emission angle, and a solar incidence angle as close as possible to 68°. This incidence angle was defined as an optimum that minimizes shadows while including topographic shading. Any image taken as part of the basemap campaign is a candidate to include in BDRs. The stacking order is determined by evaluating at the camera boresight a metric that represents both spatial resolution and image geometry; lowest values for the metric represent the “best” image. The “worst” complete, map-projected image with the highest value for the metric is laid into the BDR first; then the complete image with the second-highest value is laid in second, overwriting the first image where the coverage coincides, and so on until the complete “best” image with the lowest value for the metric is on top. Where abs(*lat*) ≤ 65° and *i* ≥ 68°, the metric is:

$$\text{PIXEL_SCALE} / (\cos e * (\cos(\textit{flatten_factor} * i) / \cos(\textit{flatten_factor} * 68)))$$

where *i* is solar incidence angle, *e* is emission angle, *lat* is planetocentric latitude, and *flatten_factor* is set to 0.85 to de-emphasize low solar incidence angles. Where abs(*lat*) ≤ 65° and *i* < 68°, the metric is:

$$\text{PIXEL_SCALE} / (\cos e * (\cos 68° / \cos i))$$

Where abs(*lat*) > 65°, the metric is:

$$\text{PIXEL_SCALE} / (\cos i * \cos e)$$

In either case, values for PIXEL_SCALE less than 166 meters are reset to 166 meters.

The stacking order for HIEs and HIWs parallels that for BDRs, except that the "crossover" solar incidence angle (which tends to be "on top") is 78° instead of 68°.

For MDRs, MD3s, MP5s, and LOIs, the objective is to have “on top” those images with high spatial resolution, low emission angle, and low solar incidence angle. Any image taken as part of one of these mapping campaigns is a candidate to include in the corresponding product set. The stacking order is determined in a fashion comparable to that used for BDRs, with some modifications. If the sequence includes multiple WAC filters, rather than complete images being map-projected and laid into the mosaics, only a portion of each image is used, in which the same region of Mercury is observing in all filters of the color sequence. The image quality metric is evaluated at the camera boresight of the middle image in that sequence; lowest values represent the “best” image. For each color sequence or image taken as part of the low-incidence campaign, the “worst” image or part of a sequence with overlapping coverage in all filters (highest value of the metric) is map-projected and laid into the data product first; then the image or overlap region with the second-highest value is laid in second, overwriting the first overlap region, and so on until the “best” image or overlap region with the lowest metric is on top. At all latitude and solar incidence angles, the metric is:

$$\text{PIXEL_SCALE} / (\cos i * \cos e)$$

where for MDRs values for PIXEL_SCALE less than 665 meters are reset to 665 meters, for MD3s and MP5 values for PIXEL_SCALE less than 332 meters are reset to 332 meters, and for LOIs values for PIXEL_SCALE less than 166 meters are reset to 166 meters.

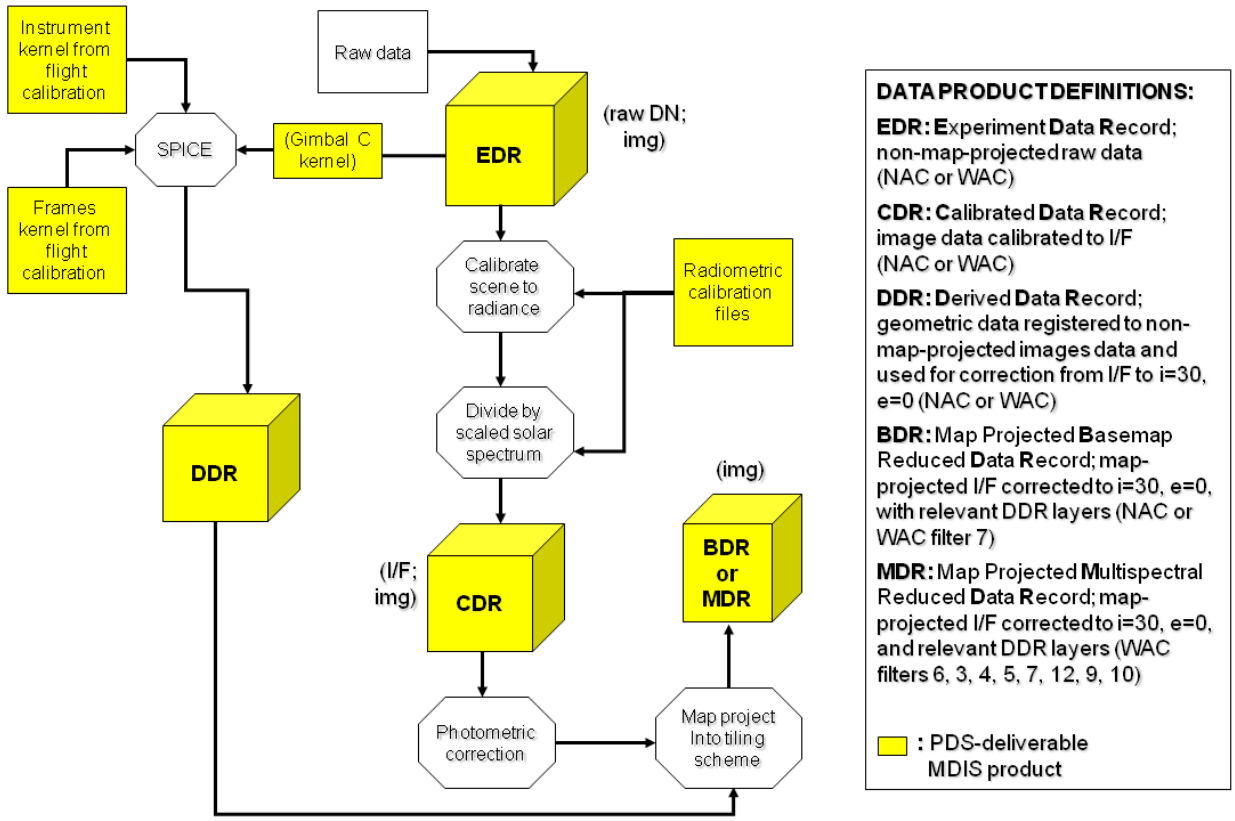

Figure 2-17: Sequential processing of EDRs to yield RDRs, showing roles of CDRs and DDRs. BDRs and MDRs are shown as examples but the same flow yields MD3s, MP5s, HIEs, HIWs, LOIs, or RTMs.

2.5.3 Data Flow and Transmittal to PDS

The MESSENGER Science Operations Center (SOC) operates under the auspices of the MESSENGER Project Scientist to plan data acquisition and generate and validate data archives. The SOC supports and works with the Mission Operations Center (MOC), the Science Team, instrument scientists, and the PDS.

The SOC is located at JHU/APL. The SOC produces early versions of products that can be used by the science and instrument teams. They will be of the same type, content, and format as the final science products with default information for unknown data such as pointing and spacecraft housekeeping.

At the end of the evaluation and validation period, the data are organized and stored in the directory structure described in section 3.3, along with fiduciary checksums. This directory structure is compressed into a single "zip archive" file for transmittal to the PDS imaging node. The zip archive preserves the directory structure internally so that when it is decompressed the original directory structure is recreated at the PDS node. The zip archive is transmitted to the PDS node via FTP to a specified URL.

2.5.4 Transmittal Time Line

Several MDIS archive releases, as detailed in the MESSENGER Data Management and Archiving Plan [Applicable Document 4], are assembled and transmitted to PDS. At least two weeks before the deadline for transmittal, the zip archive file is transmitted to the PDS node. At the same time, a letter of transmittal is sent which provides a record of the fiduciary checksums provided in the archive file itself. Within several days of transmittal, the node acknowledges receipt (but not verification) of the archive and letter of transmittal. If acknowledgement is not received, or if problems are reported, the MESSENGER SOC immediately takes corrective action to affect successful transmittal.

After transmittal, the PDS node uncompresses the zip archive file and independently calculates the fiduciary checksums for each file. The calculated checksums are compared to the checksums in the transmittal letter and those recorded in the archive itself. The node then performs any additional verification and validation of the data provided and reports any discrepancies or problems to the MESSENGER SOC. Typically the node performs these checks and inspections in about two weeks. After inspection is completed to the satisfaction of the PDS node, the node issues to the MESSENGER SOC acknowledgement of successful receipt.

2.6 Standards Used in Generating Data Products

2.6.1 PDS Standards

The MDIS data products comply with the PDS standards for file formats and labels, specifically the PDS image and table data objects [Applicable Documents 2 and 3]. Please see Appendix A for definitions of PDS data archive terms.

2.6.2 Time Standards

Two time standards are used in MDIS data products:

- spacecraft time in seconds (PDS label keywords SPACECRAFT_CLOCK_START_-COUNT and SPACECRAFT_CLOCK_STOP_COUNT)
- UTC (PDS label keywords START_TIME, STOP_TIME, and PRODUCT_CREA-TION_TIME)

2.6.3 Coordinate Systems

The following bulleted list outlines the computational assumptions for the geometric and viewing data provided in the PDS label. There are two coordinate systems in use: 1) the celestial reference system used for target and spacecraft position and velocity vectors, and camera pointing; and 2) the planetary coordinate system for geometry vectors and target location. The celestial coordinate system is J2000 (Mean of Earth equator and equinox of J2000). The planetary coordinate system is planetocentric with respect to a reference ellipsoid (sphere with 2440 km radius).

COMPUTATIONAL ASSUMPTIONS

- The mid-point time of observation is used for the geometric element computations.

- Label parameters reflect observed, not true, geometry. Therefore, light-time and stellar aberration corrections are used as appropriate.
- The inertial reference frame is J2000 (also called EME2000).
- Target body latitudes and longitudes are planetocentric. The initial agreed upon Mercury ellipsoid is a sphere with a 2440 km radius.
- The "sub-point" of a spacecraft on a target body is defined by the surface intercept of the spacecraft-to-target-body-center vector. This point is not necessarily the closest point on the target body to the spacecraft. This definition gives sub-point latitude and longitude that are independent of the target's reference ellipsoid.
- Distances are in km, speeds in km/sec, angles in degrees.
- Angular rates in degrees/sec, unless otherwise noted.
- Angle ranges are 0 to 360 degrees for azimuths and local hour angle. Longitudes range from 0 to 360 degrees (positive to the East). Latitudes range from -90 to 90 degrees.

2.6.4 Data Storage Conventions

The data are organized following PDS standards and transferred to the PDS for distribution to the science community. Data will be stored under unique file names as defined in Section 3.3.

2.7 Data Validation

Data validation falls into two types, validation of the science data and validation of the compliance of the archive with PDS archiving and distribution requirements. The first type of validation is carried out by the Science Team, and the second is overseen by the PDS, in coordination with the Science Team.

The formal validation of data content, adequacy of documentation, and adherence to PDS archiving and distribution standards is subject to an external peer review. Peer reviews are scheduled and coordinated by the PDS. The peer review process may result in "liens," actions recommended by the reviewers or by PDS personnel to correct the archive. All liens must be resolved by the dataset provider: the SOC for Level 1 data, and the Science Team for higher-level data products, calibration data, and calibration algorithms. Once the liens are cleared, PDS does a final validation prior to packaging and delivery.

The SOC will periodically report results of validation to the Science Steering Committee. If the volumes are approved for release by the Project, then the SOC will transfer the archives to the PDS [Applicable Document 4].

3. DETAILED DATA PRODUCT SPECIFICATIONS

3.1 Data Product Structure and Organization

Data that comprise the MESSENGER Image Archive are formatted according to the standards of the Planetary Data System, as documented in the PDS Standards Reference manual [Applicable Document 3]. Archive-quality data sets include everything needed to understand and utilize the data. The raw images by themselves are insufficient for the science community to realize the full scientific potential of the data. Thus, the MESSENGER project is providing as part of the archive the ancillary data to perform radiometric, photometric, and cartographic processing. Additionally, a documentation set is provided to describe the data products, imaging instruments, and mission operations.

3.2 Geometric Elements

Geometric elements fully describe the viewing geometry of each observation. The geometric elements are organized according to the SPICE kernel concepts adopted by the Navigational Ancillary Information Facility (NAIF) at the Jet Propulsion Laboratory. SPICE is an acronym for Spacecraft, Planet, Instrument, C-matrix, and Event kernels (see http://naif.jpl.nasa.gov).

SPICE kernels evolve and improve as further analysis is done. The PDS data labels attached to the image data products are based on the most up-to-date SPICE information available at the time of product creation.

3.3 Archive Volume Structure and Contents

This section describes the contents of the MDIS Archive volumes, including the file names, file contents, file types, and organization responsible for providing the files. The indication that a file is required means that it is required by the PDS standards for archive volumes, as specified in the PDS Standards Reference, Applicable Document 3. See Appendix A for definitions of data archive terms.

There are ten separate CDR/RDR volumes, one for each of the ten CDR/RDR product types. The volumes bear the PDS-assigned volume IDs MSGRMDS_2001, MSGRMDS_3001, MSGRMDS_4001, MSGRMDS_5001, MSGRMDS_6001, MSGRMDS_7001, MSGRMDS_7101, MSGRMDS_7201, MSGRMDS_7301, and MSGRMDS_8001 for the CDRs, DDRs, BDRs, MDRs, MD3s, HIEs, HIWs, LOIs, MP5s, and RTMs respectively. An MDIS archive volume will contain the following directories below the root. The first five are always present, if applicable (the CALIB directory is only relevant to the EDR, CDR, MDR, MD3, MP5, and RTM volumes). BROWSE and EXTRAS are populated on a best-effort basis.

- INDEX
- CATALOG
- DOCUMENT
- DATA (named CDR, DDR, BDR, MDR, MD3, MP5, HIE, HIW, LOI, or RTM based on product type)
- CALIB

- BROWSE
- EXTRAS

3.3.1 Root Directory

Files in the Root Directory (Table 3-1) include an overview of the archive, a description of the volume for the PDS Catalog, and a list of errata or comments about the archive. The following files are contained in the Root Directory.

File Name	Required?	File Contents
AAREADME.TXT	Yes	General information file. Provides users with an overview of the contents and organization of the associated volume, general instructions for its use, and contact information.
ERRATA.TXT	No	Text file for identifying and describing errors and/or anomalies found in the current volume, and possibly previous volumes of a set. Any known errors for the associated volume will be documented in this file.
VOLDESC.CAT	Yes	PDS file containing the VOLUME object. This gives a high-level description of the contents of the volume. Information includes: production date, producer name and institution, volume ID, etc.

Table 3-1: Root Directory Contents.

3.3.2 Index Directory

Files in the Index Directory (Table 3-2) are provided to help the user locate products on the archive volume. The following files are contained in the Index Directory.

File Name	Required?	File Contents
INDXINFO.TXT	Yes	Identifies and describes the function of each file in the index subdirectory. This includes a description of the structure and contents of the index table and usage notes.
INDEX.TAB	Yes	The image index file is organized as a table: there is a row for each image on the volume; the columns contain parameters that describe the observation and camera states of the images. Information includes viewing geometry (such as latitude and longitude of the image center, sun and observation angles) and camera state information such as filter wheel position, spacecraft clock count, time of observation, image integration time, and camera modes.
INDEX.LBL	Yes	Detached PDS label for INDEX.TAB that describes its organization and contents.

Table 3-2: Index Directory Contents.

Tables 3-3 and 3-4 list the columns in the CDR/DDR and BDR/MDR/MD3/MP5/HIE/HIW/LOI/RTM index files, respectively. They are the most

significant keywords pulled from labels of the various products. The lists are comprehensive in the sense that they include the important keywords for all data products. For any given data product, some of the fields are inapplicable and will be set to N/A.

Column	Format	CDR Example
VOLUME_ID	CHARACTER	MSGRMDS_2001
PATH_NAME	CHARACTER	“CDR/2007_156”
FILE_NAME	CHARACTER	“CW089570568G_RA_0.IMG”
PRODUCT_ID	CHARACTER	“CW0089570568G_RA_0”
OBSERVATION_ID	CHARACTER	“6747”
DATA_QUALITY_ID	CHARACTER	“0000001000000000”
MISSION_PHASE_NAME	CHARACTER	"VENUS 2 FLYBY"
TARGET_NAME	CHARACTER	VENUS
SEQUENCE_NAME	CHARACTER	“07156_APP_WAC_MOSAIC_1”
PRODUCT_CREATION_TIME	TIME	2007-11-13T23:30:37
START_TIME	TIME	2007-06-05T22:40:41.702888
STOP_TIME	TIME	2007-06-05T22:40:41.768887
SPACECRAFT_CLOCK_START_COUNT	CHARACTER	“1/0089570568:950000”
SPACECRAFT_CLOCK_STOP_COUNT	CHARACTER	“1/0089570568:990000”
INSTRUMENT_ID	CHARACTER	"MDIS-WAC"
FILTER_NUMBER	ASCII_INTEGER	7
CENTER_FILTER_WAVELENGTH	ASCII_INTEGER	750 <NM>
EXPOSURE_DURATION	ASCII_INTEGER	66 <MS>
EXPOSURE_TYPE	CHARACTER	AUTO
DETECTOR_TEMPERATURE	ASCII_REAL	-39.86 <degC>
FOCAL_PLANE_TEMPERATURE	ASCII_REAL	-20.19 <degC>
FILTER_TEMPERATURE	ASCII_REAL	-20.66 <degC>
OPTICS_TEMPERATURE	ASCII_REAL	-20.85 <degC>
MESS:PIV_POS	ASCII_INTEGER	9007
MESS:PIV_POS_MOTOR	ASCII_INTEGER	1000
MESS:PIV_READ	ASCII_INTEGER	9007
MESS:FPU_BIN	ASCII_INTEGER	0
MESS:COMP12_8	ASCII_INTEGER	0
MESS:COMP_ALG	ASCII_INTEGER	2
MESS:COMP_FST	ASCII_INTEGER	1
MESS:WVLRATIO	ASCII_INTEGER	4
MESS:PIXELBIN	ASCII_INTEGER	0
MESS:SUBFRAME	ASCII_INTEGER	0
RETICLE_POINT_RA_1	ASCII_REAL	182.77358 <DEG>
RETICLE_POINT_RA_2	ASCII_REAL	172.41885 <DEG>
RETICLE_POINT_RA_3	ASCII_REAL	181.37369 <DEG>
RETICLE_POINT_RA_4	ASCII_REAL	170.89950 <DEG>
RETICLE_POINT_DECLINATION_1	ASCII_REAL	0.76231 <DEG>
RETICLE_POINT_DECLINATION_2	ASCII_REAL	2.21637 <DEG>
RETICLE_POINT_DECLINATION_3	ASCII_REAL	-9.59692 <DEG>
RETICLE_POINT_DECLINATION_4	ASCII_REAL	-8.12579 <DEG>
SPACECRAFT_SOLAR_DISTANCE	ASCII_REAL	108040911.97274 <KM>
SLANT_DISTANCE	ASCII_REAL	14090.89871 <KM>
CENTER_LATITUDE	ASCII_REAL	35.73941 <DEG>
CENTER_LONGITUDE	ASCII_REAL	226.54464 <DEG>

Column	Format	CDR Example
HORIZONTAL_PIXEL_SCALE	ASCII_REAL	2530.43332 <M>
SMEAR_MAGNITUDE	ASCII_REAL	10.38328 <PIXELS>
RETICLE_POINT_LATITUDE_1	ASCII_REAL	“N/A”
RETICLE_POINT_LATITUDE_2	ASCII_REAL	47.22207 <DEG>
RETICLE_POINT_LATITUDE_3	ASCII_REAL	24.61941 <DEG>
RETICLE_POINT_LATITUDE_4	ASCII_REAL	20.95210 <DEG>
RETICLE_POINT_LONGITUDE_1	ASCII_REAL	“N/A”
RETICLE_POINT_LONGITUDE_2	ASCII_REAL	244.79392 <DEG>
RETICLE_POINT_LONGITUDE_3	ASCII_REAL	208.68936 <DEG>
RETICLE_POINT_LONGITUDE_4	ASCII_REAL	239.57209 <DEG>
SOLAR_DISTANCE	ASCII_REAL	108040911.97274 <KM>
SUB_SOLAR_AZIMUTH	ASCII_REAL	11.49500 <DEG>
SUB_SPACECRAFT_LATITUDE	ASCII_REAL	14.91164 <DEG>
SUB_SPACECRAFT_LONGITUDE	ASCII_REAL	246.92915 <DEG>
SPACECRAFT_ALTITUDE	ASCII_REAL	13114.84420 <KM>
SUB_SOLAR_LATITUDE	ASCII_REAL	-1.29302 <DEG>
SUB_SOLAR_LONGITUDE	ASCII_REAL	283.86863 <DEG>
INCIDENCE_ANGLE	ASCII_REAL	64.85698 <DEG>
PHASE_ANGLE	ASCII_REAL	30.69683 <DEG>
EMISSION_ANGLE	ASCII_REAL	39.19187 <DEG>
DARK_STRIP_MEAN	ASCII_REAL	7.81804628787e-05
MINIMUM	ASCII_REAL	7.81804628787e-05
MAXIMUM	ASCII_REAL	0.1620197892189
MEAN	ASCII_REAL	0.032525319648508
STANDARD_DEVIATION	ASCII_REAL	0.029913486227533
SATURATED_PIXEL_COUNT	ASCII_REAL	0
MISSING_PIXELS	ASCII_REAL	0

Table 3-3: CDR/DDR Index Table Contents.

Column	Format	BDR Example
VOLUME_ID	CHARACTER	MSGRMDS_4001
PATH_NAME	CHARACTER	BDR/H03/
FILE_ NAME	CHARACTER	“MDIS_BDR_200PPD_H03NE.IMG”
PRODUCT_ID	CHARACTER	“MDIS_BDR_200PPD_H03NE”
PRODUCT_CREATION_TIME	TIME	2011-10-25T23:17:20.029
START_TIME	TIME	9999-01-01T01:01:01
STOP_TIME	TIME	9999-01-01T01:01:01
PRODUCT_VERSION_ID	ASCII_INTEGER	1
LINES	ASCII_INTEGER	6400
LINE_SAMPLES	ASCII_INTEGER	9216
BANDS	ASCII_INTEGER	2
MAP_PROJECTION_TYPE	CHARACTER	"EQUIRECTANGULAR"
CENTER_LATITUDE	ASCII_REAL	0.0000000 <DEGREE>
CENTER_LONGITUDE	ASCII_REAL	0.000000 <DEGREE>
MAP_SCALE	ASCII_REAL	212.930169 <M/PIXEL>
MAP_RESOLUTION	ASCII_INTEGER	200 <PIXEL/DEGREE>
LINE_PROJECTION_OFFSET	ASCII_REAL	13000.000003
SAMPLE_PROJECTION_OFFSET	ASCII_REAL	3250.637830

Column	Format	BDR Example
MAXIMUM_LATITUDE	ASCII_REAL	25.0000000 <DEGREE>
MINIMUM_LATITUDE	ASCII_REAL	0.0000000 <DEGREE>
WESTERNMOST_LONGITUDE	ASCII_REAL	0.0000000 <DEGREE>
EASTERNMOST_LONGITUDE	ASCII_REAL	36.0000000 <DEGREE>

Table 3-4: BDR/MDR/MD3/MP5/HIE/HIW/LOI/RTM Index Table Contents.

3.3.3 Catalog Directory

The files in the Catalog Directory (Table 3-5) provide a top-level understanding of the mission, spacecraft, instruments, and data set. The files in this directory become part of the PDS Catalog to provide background information for the user searching for data. Their format and contents are further specified in the PDS Standards Reference (Applicable Document 3). The following files are found in the Catalog Directory.

File Name	Required?	File Contents
CATINFO.TXT	Yes	Identifies and describes the function of each file in the catalog directory.
MDIS_NNN_DS.CAT	Yes	Data set description, where NNN is replaced by CDR, DDR, BDR, MDR, MD3, MP5, HIE, HIW, LOI, or RTM.
INSTHOST.CAT	Yes	Description of the MESSENGER spacecraft for the PDS catalog.
MDIS_NAC_INST.CAT MDIS_WAC_INST.CAT	Yes	Description of the MDIS NAC and WAC.
NNN_MAP.CAT	Yes	MDIS data set map projection information, where NNN is replaced by BDR, MDR, MD3, MP5, HIE, HIW, LOI, or RTM.
NNN_POLAR_MAP.CAT	Yes	MDIS data set map projection information for polar regions, where NNN is replaced by BDR, MDR, MD3, MP5, HIE, HIW, or LOI (not applicable to RTM).
MISSION.CAT	Yes	Description of the MESSENGER mission.
PERSON.CAT	Yes	List of personnel associated with the MESSENGER PDS delivery.
TARGET.CAT	Yes	List of astronomical and planetary targets in the images.
REF.CAT	Yes	Catalog objects' citation list for the PDS catalog.

Table 3-5: Catalog Directory Contents.

3.3.4 Document Directory

The Document Directory (Table 3-6) contains documentation to help the user understand and use the archive data. The following files are contained in the Document Directory.

File Name	Required?	File Contents
DOCINFO.TXT	Yes	Identifies and describes the function of each file in the document directory.
MDIS_CDR_RDRSIS.DOC	Yes	Software Interface Specification for the CDR/RDR data products as a Microsoft Word document.
MDIS_CDR_RDRSIS.PDF	Yes	Software Interface Specification for the CDR/RDR data products as an Adobe PDF document.
MDIS_CDR_RDRSIS.HTM	Yes	Software Interface Specification for the CDR/RDR data products as an HTML document.
MDIS_CDR_RDRSIS.LBL	Yes	PDS label for MDIS_CDR_RDRSIS.DOC, MDIS_CDR_RDRSIS.PDF and MDIS_CDR_RDRSIS.HTM.
PDSDD.FUL	No	PDS data dictionary. Includes definitions of all keywords used in MESSENGER data labels.

Table 3-6: Document Directory Contents.

3.3.5 CDR Directory (CDR Volumes Only)

3.3.5.1 CDR File Naming

The file names developed for this PDS archive are restricted to a maximum 36-character base name and 3 character extension name with a period separating the file and extension names. Also known as the "36.3" format, this is compliant with the ISO 9660 Level 2 specification (maximum of 40 characters), which is required by PDS. The MDIS CDR products have a "18.3" format and thus remain within the PDS specification parameters. Below is the detailed naming convention for this dataset.

Format: "pcrnnnnnnnnnf_tt_v"

p = product type = C calibrated
c = camera (W WAC or N NAC)
r = spacecraft-clock-partition-number minus 1 [0, 1] for pre- or post-spacecraft-clock-reset
nnnnnnnnn = Mission Elapsed Time (MET) counter taken from the image header (and same as original compressed filename from SSR). NOTE: this is a spacecraft clock seconds counter, and the value in the filename corresponds to the LAST second of the exposure.
f = Filter wheel position (A, B, C, D, E, F, G, H, I, J, K, L, U) for the WAC (see Table 3-7 below). It is M for the NAC, which has no filter wheel. It will be U if the position is unknown.
tt = data type (RA radiance, IF I/F, or RE reflectance photometrically corrected to incidence angle i=30°, emergence angle e=0°, phase angle g=30°)
v = version number

The following is an example file name with a description of the individual components:

Filter Number	Filter Filename Letter	Wavelength (Flight) (nm)	Width (Flight) (nm)
1	A	698.8	5.3
2	B	700	600.0
3	C	479.9	10.1
4	D	558.9	5.8
5	E	628.8	5.5
6	F	433.2	18.1
7	G	748.7	5.1
8	H	947.0	6.2
9	I	996.2	14.3
10	J	898.8	5.1
11	K	1012.6	33.3
12	L	828.4	5.2

Table 3-7: Filter numbers and their bandpasses.

CW0014032676F_RA_0.IMG

For this image:

- Product type = CDR (**C**)
- Camera = WAC (**W**)
- Clock partition = 1 (pre-clock reset)
- MET = **014032676**
- WAC filter wheel position = 6 (433nm/18 nm FWHM) **(F**)
- Data type = radiance (**RA**)
- Version number = 0

3.3.5.2 CDR Structure and Organization

A Calibrated Data Record (CDR) is a single image that has been corrected for geometric and optical effects. The MDIS CDR data set consists of files that parallel Experiment Data Records (EDRs) in their format and directory structure. Each attached label points to a single-frame calibrated image in units of radiance or I/F as 32-bit PC_REAL or IEEE_REAL.

x, y dimensions = 1024/(MESS:FPU_BIN * MESS:PIXELBIN)

See section 2.5.2.1 for a description of how the CDR products are generated.

3.3.5.3 CDR Label Description

The label area of the data file conforms to PDS version 3.7 standards (Applicable Document 3). The purpose of the PDS label is to describe the measurement data and provide engineering and observation parameters. A sample CDR label can be found in Appendix C. Table 3-8 below lists MDIS-specific values for CDR label keywords. See Appendix B for keyword descriptions.

As a result of an August 2009 flight software update, all MDIS CDRs were regenerated and redelivered to PDS with Release 5 (March 15, 2010). The keywords OBSERVATION_ID, MESS:IMG_ID_LSB, MESS:IMG_ID_MSB, and MESS:PIV_POS_MOTOR were added to the CDR labels with this update. CDRs from Mercury Flyby 2 and earlier have values of “N/A” for these keywords. The keyword MESS:PIV_GOAL is set to “N/A” after Mercury Flyby 2.

Keyword	Valid Values
INSTRUMENT_NAME	“MERCURY DUAL IMAGING SYSTEM WIDE ANGLE CAMERA” “MERCURY DUAL IMAGING SYSTEM NARROW ANGLE CAMERA”
INSTRUMENT_ID	“MDIS-WAC” “MDIS-NAC”
OBSERVATION_TYPE	"Albedo" "Albedo,Albedo Stereo" "Co-align Calibration" "Color" "Color,Southern Polar" "Color,Targeted" "Color,Targeted,Photometry" "Comet" "Dark Current" "Dark Polar Craters" "Eleven Color,NAC WAC Calibration" "Engineering" "High Incidence" "Limb" "Min Phase Five Color" "Monochrome" "Monochrome,Ridealong NAC" "Monochrome,Stereo" "Monochrome,Targeted" "N/A" "NAC WAC Calibration" "Northern Polar" "Pivot Calibration" "Satellite Search" "Southern Polar" "Southern Polar,Eleven Color" "Stereo,Targeted" "Targeted,Eleven Color" "Targeted,Photometry,Eleven Color" "Thermal Calibration" "Three Color" "Vulcanoid Search"
FILTER_NAME	"430 BP 40", "430 BW 40" "480 BP 10", "480 BW 10" "560 BP 5", "560 BW 5" "630 BP 5", "630 BW 5" "700 BP 5", "700 BW 5" "750 BP 5", "750 BW 5" "830 BP 5", "830 BW 5" "900 BP 5", "900 BW 5" "950 BP 7", "950 BW 7" "1000 BP 15", "1000 BW 15" "1020 BP 40", "1020 BW 40" “N/A”
FILTER_NUMBER	Integer 1 - 12 “N/A”
MESS:MET_EXP	Time in seconds
MESS:IMG_ID_LSB	Integer 0 to 65535
MESS:IMG_ID_MSB	Integer 0 to 255
MESS:ATT_CLOCK_COUNT	Time in seconds
MESS:ATT_Q1	-1.0 to 1.0
MESS:ATT_Q2	-1.0 to 1.0
MESS:ATT_Q3	-1.0 to 1.0
MESS:ATT_Q4	-1.0 to 1.0
MESS:ATT_FLAG	Integer 0 to 7
MESS:PIV_POS_MOTOR	Integer 0 to 65535
MESS:PIV_GOAL	Integer -32768 to 32768
MESS:PIV_POS	Integer -32768 to 32768
MESS:PIV_READ	Integer 0 to 65535
MESS:PIV_CAL	Integer -32768 to 32768
MESS:FW_GOAL	Integer 0 to 65535

Keyword	Valid Values
MESS:FW_POS	Integer 0 to 65535
MESS:FW_READ	Integer 0 to 65535
MESS:CCD_TEMP	Integer 0 to 4095
MESS:CAM_T1	Integer 0 to 1023
MESS:CAM_T2	Integer 0 to 1023
MESS:EXPOSURE	Time in seconds
MESS:DPU_ID	Integer 0 or 1
MESS:IMAGER	Integer 0 or 1
MESS:SOURCE	Integer 0, 1, or 2
MESS:FPU_BIN	Integer 0 or 1
MESS:COMP12_8	Integer 0 or 1
MESS:COMP_ALG	Integer 0 to 7
MESS:COMP_FST	Integer 0 or 1
MESS:TIME_PLS	Integer 0 to 3
MESS:LATCH_UP	Integer 0 or 1
MESS:EXP_MODE	Integer 0 or 1
MESS:PIV_STAT	Integer 0 to 3
MESS:PIV_MPEN	Integer 0 or 1
MESS:PIV_PV	Integer 0 or 1
MESS:PIV_RV	Integer 0 or 1
MESS:FW_PV	Integer 0 or 1
MESS:FW_RV	Integer 0 or 1
MESS:AEX_STAT	Integer 0 to 4095
MESS:AEX_STHR	Integer 0 to 65535
MESS:AEX_TGTB	Integer 0 to 4095
MESS:AEX_BACB	Integer 0 to 4095
MESS:AEX_MAXE	Integer 0 to 989
MESS:AEX_MINE	Integer 0 to 989
MESS:DLNKPRIO	Integer 0 to 9
MESS:WVLRATIO	Integer 0 to 32
MESS:PIXELBIN	Integer 0, 2, 4, or 8
MESS:SUBFRAME	Integer 0 to 5
MESS:SUBF_X1	Integer 0 to 1023
MESS:SUBF_Y1	Integer 0 to 1023
MESS:SUBF_DX1	Integer 0 to 1024
MESS:SUBF_DY1	Integer 0 to 1024
MESS:SUBF_X2	Integer 0 to 1023
MESS:SUBF_Y2	Integer 0 to 1023
MESS:SUBF_DX2	Integer 0 to 1024
MESS:SUBF_DY2	Integer 0 to 1024
MESS:SUBF_X3	Integer 0 to 1023
MESS:SUBF_Y3	Integer 0 to 1023
MESS:SUBF_DX3	Integer 0 to 1024
MESS:SUBF_DY3	Integer 0 to 1024
MESS:SUBF_X4	Integer 0 to 1023
MESS:SUBF_Y4	Integer 0 to 1023
MESS:SUBF_DX4	Integer 0 to 1024
MESS:SUBF_DY4	Integer 0 to 1024
MESS:SUBF_X5	Integer 0 to 1023
MESS:SUBF_Y5	Integer 0 to 1023
MESS:SUBF_DX5	Integer 0 to 1024
MESS:SUBF_DY5	Integer 0 to 1024

Keyword	Valid Values
MESS:CRITOPNV	Integer 0 or 1
MESS:JAILBARS	Integer 0 or 1
MESS:JB_X0	Integer 0 to 1023
MESS:JB_X1	Integer 0 to 1023
MESS:JB_SPACE	Integer 0 to 1023

Table 3-8. MDIS-specific values for CDR label keywords.

3.3.6 DDR Directory (DDR Volumes Only)

3.3.6.1 DDR File Naming

The file names developed for this PDS archive are restricted to a maximum 36-character base name and 3 character extension name with a period separating the file and extension names. Also known as the "36.3" format, this is compliant with the ISO 9660 Level 2 specification (maximum of 40 characters), which is required by PDS. The MDIS DDR products have a "18.3" format and thus remain within the PDS specification parameters. Below is the detailed naming convention for this dataset.

Format: "pcrnnnnnnnnnf_tt_v"

p = product type = D derived
c = camera (W WAC or N NAC)
r = spacecraft-clock-partition-number minus 1 [0, 1] for pre- or post-spacecraft-clock-reset
nnnnnnnnn = Mission Elapsed Time (MET) counter taken from the image header (and same as original compressed filename from SSR). NOTE: this a spacecraft clock seconds counter, and the value in the filename corresponds to the LAST second of the exposure.
f = Filter wheel position (A, B, C, D, E, F, G, H, I, J, K, L, U) for the WAC (see Table 3-7 above). It is M for the NAC, which has no filter wheel. It will be U if the position is unknown.
tt = data type (RA radiance, IF I/F, or DE derived products)
v = version number

The following is an example file name with a description of the individual components:

DW0089570568F_DE_0.IMG

For this image:

- Product type = DDR (**D**)
- Camera = WAC (**W**)
- Clock partition = 1 (pre-clock reset)
- MET = **089570568**
- WAC filter wheel position = 6 (419nm/44 nm FWHM) **(F**)
- Data type = derived (**DE**)
- Version number = 0

3.3.6.2 DDR Structure and Organization

The Derived Data Record (DDR) data set consists of files that parallel CDRs in their directory structure. Each DDR has 5 layers of data containing geometric information (latitude, longitude, incidence angle, emission angle, phase angle) as 32-bit PC_REAL or IEEE_REAL. This information is derived from pixel spatial coordinates and associated SPICE files. A DDR label is attached and points to a single multiband image in the DDR.

x, y dimensions = 1024/(MESS:FPU_BIN * MESS:PIXELBIN)

See section 2.5.2.2 for a description of how the DDR products are generated.

3.3.6.3 DDR Label Description

The label conforms to PDS version 3.7 standards (Applicable Document 3). The purpose of the PDS label is to describe the measurement data and provide engineering and observation parameters. A sample DDR label can be found in Appendix D. Table 3-9 below lists MDIS-specific values for DDR label keywords. See Appendix B for keyword descriptions.

Keyword	Valid Values	
INSTRUMENT_NAME	“MERCURY DUAL IMAGING SYSTEM WIDE ANGLE CAMERA” “MERCURY DUAL IMAGING SYSTEM NARROW ANGLE CAMERA	
INSTRUMENT_ID	“MDIS-WAC” “MDIS-NAC”	
FILTER_NAME	"430 BP 40", "430 BW 40" "480 BP 10", "480 BW 10" "560 BP 5", "560 BW 5" "630 BP 5", "630 BW 5" "700 BP 5", "700 BW 5" "750 BP 5", "750 BW 5" "830 BP 5", "830 BW 5" "900 BP 5", "900 BW 5" "950 BP 7", "950 BW 7" "1000 BP 15", "1000 BW 15" "1020 BP 40", "1020 BW 40" “N/A”	
OBSERVATION_TYPE	"Albedo" "Albedo,Albedo Stereo" "Co-align Calibration" "Color" "Color,Southern Polar" "Color,Targeted" "Color,Targeted,Photometry" "Comet" "Dark Current" "Dark Polar Craters" "Eleven Color,NAC WAC Calibration" "Engineering" "High Incidence" "Limb" "Min Phase Five Color" "Monochrome" "Monochrome,Ridealong NAC" "Monochrome,Stereo"	"NAC WAC Calibration" "Northern Polar" "Pivot Calibration" "Satellite Search" "Southern Polar" "Southern Polar,Eleven Color" "Stereo,Targeted" "Targeted,Eleven Color" "Targeted,Photometry,Eleven Color" "Thermal Calibration" "Three Color" "Vulcanoid Search"

Keyword	Valid Values
	"Monochrome,Targeted" "N/A"
FILTER_NUMBER	Integers 1 - 12 “N/A”
MESS:MET_EXP	Time in seconds
MESS:IMG_ID_LSB	Integer 0 to 65535
MESS:IMG_ID_MSB	Integer 0 to 255
MESS:ATT_CLOCK_COUNT	Time in seconds
MESS:ATT_Q1	-1.0 to 1.0
MESS:ATT_Q2	-1.0 to 1.0
MESS:ATT_Q3	-1.0 to 1.0
MESS:ATT_Q4	-1.0 to 1.0
MESS:ATT_FLAG	Integer 0 to 7
MESS:PIV_POS_MOTOR	Integer 0 to 65535
MESS:PIV_GOAL	Integer -32768 to 32768
MESS:PIV_POS	Integer -32768 to 32768
MESS:PIV_READ	Integer 0 to 65535
MESS:PIV_CAL	Integer -32768 to 32768
MESS:FW_GOAL	Integer 0 to 65535
MESS:FW_POS	Integer 0 to 65535
MESS:FW_READ	Integer 0 to 65535
MESS:CCD_TEMP	Integer 0 to 4095
MESS:CAM_T1	Integer 0 to 1023
MESS:CAM_T2	Integer 0 to 1023
MESS:EXPOSURE	Time in seconds
MESS:DPU_ID	Integer 0 or 1
MESS:IMAGER	Integer 0 or 1
MESS:SOURCE	Integer 0, 1, or 2
MESS:FPU_BIN	Integer 0 or 1
MESS:COMP12_8	Integer 0 or 1
MESS:COMP_ALG	Integer 0 to 7
MESS:COMP_FST	Integer 0 or 1
MESS:TIME_PLS	Integer 0 to 3
MESS:LATCH_UP	Integer 0 or 1
MESS:EXP_MODE	Integer 0 or 1
MESS:PIV_STAT	Integer 0 to 3
MESS:PIV_MPEN	Integer 0 or 1
MESS:PIV_PV	Integer 0 or 1
MESS:PIV_RV	Integer 0 or 1
MESS:FW_PV	Integer 0 or 1
MESS:FW_RV	Integer 0 or 1
MESS:AEX_STAT	Integer 0 to 4095
MESS:AEX_STHR	Integer 0 to 65535
MESS:AEX_TGTB	Integer 0 to 4095
MESS:AEX_BACB	Integer 0 to 4095
MESS:AEX_MAXE	Integer 0 to 989
MESS:AEX_MINE	Integer 0 to 989
MESS:DLNKPRIO	Integer 0 to 9
MESS:WVLRATIO	Integer 0 to 32
MESS:PIXELBIN	Integer 0, 2, 4, or 8
MESS:SUBFRAME	Integer 0 to 5
MESS:SUBF_X1	Integer 0 to 1023

Keyword	Valid Values
MESS:SUBF_Y1	Integer 0 to 1023
MESS:SUBF_DX1	Integer 0 to 1024
MESS:SUBF_DY1	Integer 0 to 1024
MESS:SUBF_X2	Integer 0 to 1023
MESS:SUBF_Y2	Integer 0 to 1023
MESS:SUBF_DX2	Integer 0 to 1024
MESS:SUBF_DY2	Integer 0 to 1024
MESS:SUBF_X3	Integer 0 to 1023
MESS:SUBF_Y3	Integer 0 to 1023
MESS:SUBF_DX3	Integer 0 to 1024
MESS:SUBF_DY3	Integer 0 to 1024
MESS:SUBF_X4	Integer 0 to 1023
MESS:SUBF_Y4	Integer 0 to 1023
MESS:SUBF_DX4	Integer 0 to 1024
MESS:SUBF_DY4	Integer 0 to 1024
MESS:SUBF_X5	Integer 0 to 1023
MESS:SUBF_Y5	Integer 0 to 1023
MESS:SUBF_DX5	Integer 0 to 1024
MESS:SUBF_DY5	Integer 0 to 1024
MESS:CRITOPNV	Integer 0 or 1
MESS:JAILBARS	Integer 0 or 1
MESS:JB_X0	Integer 0 to 1023
MESS:JB_X1	Integer 0 to 1023
MESS:JB_SPACE	Integer 0 to 1023
BAND_NAME	"Latitude, planetocentric, deg N" "Longitude, planetocentric, deg E" "Incidence angle at equipotential surface, deg" "Emission angle at equipotential surface, deg" "Phase angle at equipotential surface, deg"

Table 3-9. MDIS-specific values for DDR label keywords.

3.3.7 BDR Directory (BDR Volumes Only)

MDIS near-nadir basemap imaging of Mercury is mosaicked into 54 non-overlapping, 256 pixel/degree tiles (BDRs). Each tile corresponds to the NW, NE, SW, or, SE quadrant of one of the pre-existing Mercury non-polar charts or one of the two polar charts. For each BDR, 2 or 3 files may be present.

3.3.7.1 BDR File Naming

The file names developed for this PDS archive are restricted to a maximum 36-character base name and 3 character extension name with a period separating the file and extension names. Also known as the “36.3” format, this is compliant with the ISO 9660 Level 2 specification (maximum of 40 characters), which is required by PDS. The MDIS BDR products have a “22.3” format and thus remain within the PDS specification parameters. Below is the detailed naming convention for this dataset.

Map tiles are named based on the quadrant of the Mercury chart they span.

Format: "MDIS_ppp_rrrPPD_Hxxddv.ext"

ppp = product type = BDR

rrr = resolution in pixels/degree (PPD)
Hxx = Mercury chart designation
dd = quadrant within Mercury chart (NW, NE, SW, or SE), or a polar chart (NP, SP)
v = version number
ext = IMG for the multiband image, LBL for the detached label, and HDR for an ENVI header that may also be present. The ENVI header facilitates ingestion of the BDR into ENVI software.

The following is an example file name with a description of the individual components:

MDIS_BDR_256PPD_H03NE0.IMG

For this image:

- Product type = BDR (**BDR**)
- Resolution = 256 pixels/degree (**256PPD**)
- Mercury chart = Shakespeare (**H03**)
- Quadrant = Northeast (**NE**)
- Version = 0

3.3.7.2 BDR Structure and Organization

The BDR directory, present in the BDR archive volume, contains MDIS Map Projected Basemap Reduced Data Records (BDRs). The BDRs are organized into subdirectories based on the Mercury Chart containing the BDR. Latitude and longitude limits of Mercury Charts and the corresponding subdirectory names are given in Table 3-10.

Quadrangle	Subdirectory name	Latitude (degrees)	Longitude (deg. east)
H-1 Borealis	H01	65 to 90	0 to 360
H-2 Victoria	H02	22.5 to 65	270 to 360
H-3 Shakespeare	H03	22.5 to 65	180 to 270
H-4 Liguria	H04	22.5 to 65	90 to 180
H-5 Apollonia	H05	22.5 to 65	0 to 90
H-6 Kuiper	H06	-22.5 to 22.5	288 to 360
H-7 Beethoven	H07	-22.5 to 22.5	216 to 288
H-8 Tolstoj	H08	-22.5 to 22.5	144 to 216
H-9 Solitudo Criophori	H09	-22.5 to 22.5	72 to 144
H-10 Pieria	H10	-22.5 to 22.5	0 to 72
H-11 Discovery	H11	-65 to -22.5	270 to 360
H-12 Michelangelo	H12	-65 to -22.5	180 to 270
H-13 Solitudo Persephones	H13	-65 to -22.5	90 to 180
H-14 Cyllene	H14	-65 to -22.5	0 to 90
H-15 Bach	H15	-90 to -65	0 to 360

Table 3-10. Latitude and longitude limits of Mercury Charts.

A BDR:

- Consists of an uncontrolled mosaic of map-projected, photometrically normalized I/F CDRs collectively forming a monochrome map tile.

- Contains image data in I/F corrected photometrically to i=30°, e=0°, g=30° sampled at a scale of 256 pixels per degree (~166 meters/pixel at the equator), composed of WAC filter 7 (G) (750 BP 5) and NAC images.
- Represents one latitude-longitude bin in a global map.
- Contains 5 backplanes for the reference 750-nm band: (a) observation id, (b) BDR metric, (c) solar incidence angle, (d) emission angle, and (e) phase angle. "BDR metric" is a metric describing the resolution and illumination of data used to determine where and whether to overlay future imaging coverage (see section 2.5.2.3).
- Is accompanied by a label and possibly by an ENVI header.

Versions increment on reprocessing or addition of new data. Polar tiles are in polar stereographic projections, other tiles in equirectangular projection.

See section 2.5.2.3 for a description of how the BDR products are generated.

3.3.7.3 BDR Map Projection Standards

The projection convention adopted by the MESSENGER project is planetocentric, positive east, using the prime meridian and pole of rotation described in Davies et al. [1976, Applicable Document 12]. The projection varies with latitude, using EQUIRECTANGULAR for tiles centered equatorward of 65 degrees latitude, and POLAR STEREOGRAPHIC centered poleward of 65 degrees latitude.

3.3.7.3.3 Equirectangular Projections

The projection convention adopted by the MESSENGER project is planetocentric, positive east, using the prime meridian and pole of rotation described in Davies et al. [1976, Applicable Document 12]. The projection varies with latitude, using EQUIRECTANGULAR for tiles centered equatorward of 65 degrees latitude, and POLAR STEREOGRAPHIC centered poleward of 65 degrees latitude.

<u>Equirectangular Projections</u>

For the latitude band projected equirectangularly, the CENTER_LATITUDE of projection is the equatorward boundary of each band to minimize 'distortion.' The transformation from line and sample coordinates to planetocentric latitude and longitude is given by these equations.

x = (SAMPLE - SAMPLE_PROJECTION_OFFSET - 0.5) * MAP_SCALE

y = (LINE - LINE_PROJECTION_OFFSET - 0.5) * -1 * MAP_SCALE

lat = y / (A_AXIS_RADIUS * 1000)

lon = CENTER_LONGITUDE +

180/pi * (x/(A_AXIS_RADIUS * 1000 * cos(CENTER_LATITUDE*pi/180))

Note that integral values of line and sample correspond to the center of a pixel. Lat and lon are the latitude and longitude of a given location on the surface, east positive.

MAP_SCALE= the map scale in meters per pixel, 166.339169 meters/pixel for a BDR, which achieves close to the desired 256 pixels/degree at the CENTER_LATITUDE.

LINE_PROJECTION_OFFSET = the line offset value of the map projection origin from the line and sample 1,1 (line and sample 1,1 is considered the upper left corner of the digital array). For an EQUIRECTANGULAR map projection, origin is the equatorward edge of the map tile. The value of LINE_PROJECTION_OFFSET is positive for images starting north of the equator and is negative for images starting south of the equator.

SAMPLE_PROJECTION_OFFSET = the sample offset value of the map projection origin from line and sample 1,1 (line and sample 1,1 is considered the upper left corner of the digital array). For an EQUIRECTANGULAR map projection, the value of SAMPLE_PROJECTION_OFFSET is positive for images starting to the west of the projection longitude and is negative for images starting to the east of the projection longitude.

MAP_RESOLUTION is measured in pixels/degree.

There are four PDS parameters that specify the latitude and longitude boundaries of an image. MAXIMUM_LATITUDE and MINIMUM_LATITUDE specify the latitude boundaries of the image, and EASTERNMOST_LONGITUDE and WESTERNMOST_LONGITUDE specify the longitudinal boundaries of the map.

Definitions of other mapping parameters can be found in the PDS Data Dictionary.

Polar Stereographic Projections

For the latitude bands projected polar stereographically, projection is centered on the north or south pole. Lines of longitude extend radially from the pole and parallels of latitude are concentric circles around the center. In the north, longitude 0 extends straight down from the center and Longitude 90 East extends to the right. In the south, longitude 0 extends straight up from the center, and longitude 90 East extends to the right. Thus in any given tile, north is at a variable orientation in LINE-SAMPLE space. The transformation from line and sample coordinates to planetocentric latitude and longitude is given by these equations.

```
x = (SAMPLE - SAMPLE_PROJECTION_OFFSET - 0.5) * MAP_SCALE

y = (LINE - LINE_PROJECTION_OFFSET - 0.5) * -1 * MAP_SCALE

rho = sqrt(x^2 + y^2)

  (if rho=0, lat,lon is the reference pole)

c = 2 * atan(rho/(2*(A_AXIS_RADIUS*1000)))

lon = CENTER_LONGITUDE + (atan2(x,-y) * 180/pi) (northern hemisphere)

lon = CENTER_LONGITUDE + (atan2(x,y) * 180/pi) (southern hemisphere)

lat = 180/pi *     arcsin[cos(c)*sin(CENTER_LATITUDE*pi/180) +

  (y*sin(c)*cos(CENTER_LATITUDE*pi/180)/rho)]
```

where lat = latitude in degrees and lon = longitude in degrees.

LINE_PROJECTION_OFFSET = the line offset value of the map projection origin from the line and sample 1,1 (line and sample 1,1 is considered the upper left corner of the digital array).

SAMPLE_PROJECTION_OFFSET = the sample offset value of the map projection origin from line and sample 1,1 (line and sample 1,1 is considered the upper left corner of the digital array).

MAP_SCALE is measured in m/pixel.

There are four PDS parameters that specify the latitude and longitude boundaries of an image. MAXIMUM_LATITUDE and MINIMUM_LATITUDE specify the latitude boundaries of the image, and EASTERNMOST_LONGITUDE and WESTERNMOST_LONGITUDE specify the longitudinal boundaries of the map.

Definitions of other mapping parameters can be found in the PDS Data Dictionary.

3.3.7.4 BDR Label Description

The detached label conforms to PDS version 3.7 standards (Applicable Document 3). The purpose of the PDS label is to describe the data product. A single label points to 1 or 2 files, the IMG file and the HDR file if it is present. Sample BDR labels can be found in Appendix E. Table 3-11 below lists MDIS-specific values for BDR label keywords. See Appendix B for keyword descriptions.

Keyword	Valid Values
INSTRUMENT_ID	“MDIS-WAC” “MDIS-NAC”
PRODUCT_TYPE	MAP_PROJECTED_BDR
UNIT	“Reflectance”
BAND_NAME	“REFLECTANCE 750NM” “OBSERVATION ID” “BDR METRIC” "SOLAR INCIDENCE ANGLE" "EMISSION ANGLE" "PHASE ANGLE”

Table 3-11. MDIS-specific values for BDR label keywords. Reflectance is at i=30°, e=0°, g=30°.

3.3.8 MDR Directory (MDR Volumes Only)

MDIS 8-color imaging of Mercury is mosaicked into 54 non-overlapping, 64 pixel/degree tiles (MDRs). Each tile corresponds to the NW, NE, SW, or SE quadrant of one of the pre-existing Mercury non-polar charts, or one of the two polar charts. For each MDR, 2 or 3 files may be present.

3.3.8.1 MDR File Naming

The file names developed for this PDS archive are restricted to a maximum 36-character base name and 3 character extension name with a period separating the file and extension names. Also known as the “36.3” format, this is compliant with the ISO 9660 Level 2 specification (maximum of 40 characters), which is required by PDS. The MDIS MDR products have a “22.3” format and thus remain within the PDS specification parameters. Below is the detailed naming convention for this dataset.

Map tiles will be named based on the quadrant of the Mercury chart they span.

Format: "MDIS_ppp_rrrPPD_Hxxddv.ext"

ppp = product type = MDR
rrr = resolution in pixels/degree (PPD)
Hxx = Mercury chart designation
dd = quadrant within Mercury chart (NW, NE, SW, or SE), or a polar chart (NP, SP)
v = version number
ext = IMG for the multiband image, LBL for the detached label, and HDR for an ENVI header that may also be present. The ENVI header facilitates ingestion of the MDR into ENVI software.

The following is an example file name with a description of the individual components:

MDIS_MDR_064PPD_H03NE0.IMG

For this image:
- Product type = MDR (**MDR**)
- Resolution = 64 pixels/degree (**064PPD**)
- Mercury chart = Shakespeare (**H03**)
- Quadrant = Northeast (**NE**)
- Version = 0

3.3.8.2 MDR Structure and Organization

The MDR directory, present in the MDR archive volume, contains 8-color MDIS Map Projected Multispectral Reduced Data Records (MDRs). The MDRs are organized into subdirectories based on the Mercury Chart containing the MDR. Latitude and longitude limits of Mercury Charts and the corresponding subdirectory names are given in Table 3-10.

An MDR:

- Consists of an uncontrolled mosaic of map-projected, photometrically normalized I/F CDRs collectively forming a multispectral map tile.
- Contains image data in I/F corrected photometrically to i=30°, e=0°, g=30° at a resolution of 64 pixels per degree (~665 m/pixel at the equator).
- Represents one latitude-longitude bin in a global color map.
- Is composed of up to 8 bands corresponding to the 8 of the 11 WAC filters. The 8 are selected on account of limitations in MESSENGER solid-state recorder space, and more or less evenly sample the spectral range of MDIS.
- Contains 5 backplanes for the reference 750-nm band: (a) observation id, (b) MDR metric, (c) solar incidence angle, (d) emission angle, and (e) phase angle. "MDR metric" is a metric describing the resolution and illumination of data used to determine where and whether to overlay future imaging coverage (see section 2.5.2.3).
- Is accompanied by a label and possibly by an ENVI header.

Versions increment on reprocessing or addition of new data. Polar tiles are in polar stereographic projections, other tiles in equirectangular projection.

See section 2.5.2.3 for a description of how the MDR products are generated.

3.3.8.3 MDR Map Projection Standards

The projection convention adopted by the MESSENGER project is planetocentric, positive east, using the prime meridian and pole of rotation described in Davies et al. [1976, Applicable Document 12]. The projection varies with latitude, using EQUIRECTANGULAR for tiles centered equatorward of 65 degrees latitude, and POLAR STEREOGRAPHIC centered poleward of 65 degrees latitude.

Equirectangular Projections

For the latitude band projected equirectangularly, the CENTER_LATITUDE of projection is the equatorward boundary of each band to minimize 'distortion.' The transformation from line and sample coordinates to planetocentric latitude and longitude is given by these equations.

x = (SAMPLE - SAMPLE_PROJECTION_OFFSET - 0.5) * MAP_SCALE

y = (LINE - LINE_PROJECTION_OFFSET - 0.5) * -1 * MAP_SCALE

lat = y / (A_AXIS_RADIUS * 1000)

lon = CENTER_LONGITUDE +

180/pi * (x/(A_AXIS_RADIUS * 1000 * cos(CENTER_LATITUDE*pi/180))

Note that integral values of line and sample correspond to the center of a pixel. Lat and lon are the latitude and longitude of a given location on the surface, east positive.

MAP_SCALE= the map scale in meters per pixel, 665.356676 meters/pixel for an MDR, which achieves close to the desired 64 pixels/degree at the CENTER_LATITUDE.

LINE_PROJECTION_OFFSET = the line offset value of the map projection origin from the line and sample 1,1 (line and sample 1,1 is considered the upper left corner of the digital array). For an EQUIRECTANGULAR map projection, origin is the equatorward edge of the map tile. The value of LINE_PROJECTION_OFFSET is positive for images starting north of the equator and is negative for images starting south of the equator.

SAMPLE_PROJECTION_OFFSET = the sample offset value of the map projection origin from line and sample 1,1 (line and sample 1,1 is considered the upper left corner of the digital array). For an EQUIRECTANGULAR map projection, the value of SAMPLE_PROJECTION_OFFSET is positive for images starting to the west of the projection longitude and is negative for images starting to the east of the projection longitude.

MAP_RESOLUTION is measured in pixels/degree.

There are four PDS parameters that specify the latitude and longitude boundaries of an image. MAXIMUM_LATITUDE and MINIMUM_LATITUDE specify the latitude boundaries of the image, and EASTERNMOST_LONGITUDE and WESTERNMOST_LONGITUDE specify the longitudinal boundaries of the map.

Definitions of other mapping parameters can be found in the PDS Data Dictionary.

Polar Stereographic Projections

For the latitude bands projected polar stereographically, projection is centered on the north or south pole. Lines of longitude extend radially from the pole and parallels of latitude are concentric circles around the center. In the north, longitude 0 extends straight down from the center and Longitude 90 East extends to the right. In the south, longitude 0 extends straight up from the center, and longitude 90 East extends to the right. Thus in any given tile, north is at a variable orientation in LINE-SAMPLE space. The transformation from line and sample coordinates to planetocentric latitude and longitude is given by these equations.

x = (SAMPLE - SAMPLE_PROJECTION_OFFSET - 0.5) * MAP_SCALE

y = (LINE - LINE_PROJECTION_OFFSET - 0.5) * -1 * MAP_SCALE

rho = sqrt(x^2 + y^2)

(if rho=0, lat,lon is the reference pole)

c = 2 * atan(rho/(2*(A_AXIS_RADIUS*1000)))

lon = CENTER_LONGITUDE + (atan2(x,-y) * 180/pi) (northern hemisphere)

lon = CENTER_LONGITUDE + (atan2(x,y) * 180/pi) (southern hemisphere)

lat = 180/pi * arcsin[cos(c)*sin(CENTER_LATITUDE*pi/180) +

(y*sin(c)*cos(CENTER_LATITUDE*pi/180)/rho)]

where lat = latitude in degrees and lon = longitude in degrees.

LINE_PROJECTION_OFFSET = the line offset value of the map projection origin from the line and sample 1,1 (line and sample 1,1 is considered the upper left corner of the digital array).

SAMPLE_PROJECTION_OFFSET = the sample offset value of the map projection origin from line and sample 1,1 (line and sample 1,1 is considered the upper left corner of the digital array).

MAP_SCALE is measured in m/pixel.

There are four PDS parameters that specify the latitude and longitude boundaries of an image. MAXIMUM_LATITUDE and MINIMUM_LATITUDE specify the latitude boundaries of the image, and EASTERNMOST_LONGITUDE and WESTERNMOST_LONGITUDE specify the longitudinal boundaries of the map.

Definitions of other mapping parameters can be found in the PDS Data Dictionary.

3.3.8.4 MDR Label Description

The detached label conforms to PDS version 3.7 standards (Applicable Document 3). The purpose of the PDS label is to describe the data product. A single label points to 1 or 2 files, the IMG file and the HDR file if it is present. Sample MDR labels can be found in Appendix F. Table 3-12 below lists MDIS-specific values for MDR label keywords. See Appendix B for keyword descriptions.

Keyword	Valid Values
INSTRUMENT_ID	“MDIS-WAC”
PRODUCT_TYPE	MAP_PROJECTED_MDR

Keyword	Valid Values
UNIT	“Reflectance”
BAND_NAME	"WAC FILTER 6 430 BP 40" "WAC FILTER 3 480 BP 10" "WAC FILTER 4 560 BP 5" "WAC FILTER 5 630 BP 5" "WAC FILTER 7 750 BP 5" "WAC FILTER 12 830 BP 5" "WAC FILTER 10 900 BP 5" "WAC FILTER 9 1000 BP 15" “OBSERVATION ID” “MDR METRIC” "SOLAR INCIDENCE ANGLE" "EMISSION ANGLE" "PHASE ANGLE”

Table 3-12. MDIS-specific values for MDR label keywords. Reflectance is at i=30°, e=0°, g=30°.

3.3.9 MD3 Directory (MD3 Volumes Only)

The 3-color MDIS image mosaic of Mercury's northern and equatorial latitudes is divided into non-overlapping, 128 pixel/degree tiles (MD3s). Each tile corresponds to the NW, NE, SW, or SE quadrant of one of the pre-existing Mercury non-polar charts, or the north polar chart. For each MD3, 2 or 3 files may be present.

3.3.9.1 MD3 File Naming

The file names developed for this PDS archive are restricted to a maximum 36-character base name and 3 character extension name with a period separating the file and extension names. Also known as the “36.3” format, this is compliant with the ISO 9660 Level 2 specification (maximum of 40 characters), which is required by PDS. The MDIS MD3 products have a “22.3” format and thus remain within the PDS specification parameters. Below is the detailed naming convention for this dataset.

Map tiles are named based on the quadrant of the Mercury chart they span.

Format: "MDIS_ppp_rrrPPD_Hxxddv.ext"

ppp = product type = MD3
rrr = resolution in pixels/degree (PPD)
Hxx = Mercury chart designation
dd = quadrant within Mercury chart (NW, NE, SW, or SE), or a polar chart (NP, SP)
v = version number
ext = IMG for the multiband image, LBL for the detached label, and HDR for an ENVI header that may also be present. The ENVI header facilitates ingestion of the MD3 into ENVI software.

The following is an example file name with a description of the individual components:

MDIS_MD3_128PPD_H03NE0.IMG

For this image:

- Product type = MD3 (**MD3**)

- Resolution = 128 pixels/degree (**128PPD**)
- Mercury chart = Shakespeare (**H03**)
- Quadrant = Northeast (**NE**)
- Version = 0

3.3.9.2 MD3 Structure and Organization

The MD3 directory, present in the MD3 archive volume, contains 3-color MDIS Map Projected Multispectral Reduced Data Records (MD3s). The MD3s are organized into subdirectories based on the Mercury Chart containing the MDR. Latitude and longitude limits of Mercury Charts and the corresponding subdirectory names are given in Table 3-10.

An MD3:

- Consists of an uncontrolled mosaic of map-projected, photometrically normalized I/F CDRs collectively forming a multispectral map tile.
- Contains image data in I/F corrected photometrically to i=30°, e=0°, g=30° at a resolution of 128 pixels per degree (~332 m/pixel at the equator).
- Represents one latitude-longitude bin in a regional color map.
- Is composed of up 3 bands corresponding to 3 of the 11 WAC filters. The 3 sample albedo and spectral slope variations over the spectral range of MDIS; the fewer filters than in the 8-color map is for data volume management during acquisition, due to spatial sampling >2 times smaller in scale.
- Contains 5 backplanes for the reference 750-nm band: (a) observation id, (b) MDR metric, (c) solar incidence angle, (d) emission angle, and (e) phase angle. "MDR metric" is a metric describing the resolution and illumination of data used to determine where and whether to overlay future imaging coverage (see section 2.5.2.3), modified for the different limiting spatial resolution.
- Is accompanied by a label and possibly by an ENVI header.

Versions increment on reprocessing or addition of new data. Polar tiles are in polar stereographic projections, other tiles in equirectangular projection.

See section 2.5.2.3 for a description of how the MDR products are generated.

3.3.9.3 MD3 Map Projection Standards

The projection convention adopted by the MESSENGER project is planetocentric, positive east, using the prime meridian and pole of rotation described in Davies et al. [1976, Applicable Document 12]. The projection varies with latitude, using EQUIRECTANGULAR for tiles centered equatorward of 65 degrees latitude, and POLAR STEREOGRAPHIC centered poleward of 65 degrees latitude.

<u>Equirectangular Projections</u>

For the latitude band projected equirectangularly, the CENTER_LATITUDE of projection is the equatorward boundary of each band to minimize 'distortion.' The transformation from line and sample coordinates to planetocentric latitude and longitude is given by these equations.

x = (SAMPLE - SAMPLE_PROJECTION_OFFSET - 0.5) * MAP_SCALE

y = (LINE - LINE_PROJECTION_OFFSET - 0.5) * -1 * MAP_SCALE

lat = y / (A_AXIS_RADIUS * 1000)

lon = CENTER_LONGITUDE +

180/pi * (x/(A_AXIS_RADIUS * 1000 * cos(CENTER_LATITUDE*pi/180))

Note that integral values of line and sample correspond to the center of a pixel. Lat and lon are the latitude and longitude of a given location on the surface, east positive.

MAP_SCALE= the map scale in meters per pixel, 332.678338 meters/pixel for an MD3, which achieves close to the desired 128 pixels/degree at the CENTER_LATITUDE.

LINE_PROJECTION_OFFSET = the line offset value of the map projection origin from the line and sample 1,1 (line and sample 1,1 is considered the upper left corner of the digital array). For an EQUIRECTANGULAR map projection, origin is the equatorward edge of the map tile. The value of LINE_PROJECTION_OFFSET is positive for images starting north of the equator and is negative for images starting south of the equator.

SAMPLE_PROJECTION_OFFSET = the sample offset value of the map projection origin from line and sample 1,1 (line and sample 1,1 is considered the upper left corner of the digital array). For an EQUIRECTANGULAR map projection, the value of SAMPLE_PROJECTION_OFFSET is positive for images starting to the west of the projection longitude and is negative for images starting to the east of the projection longitude.

MAP_RESOLUTION is measured in pixels/degree.

There are four PDS parameters that specify the latitude and longitude boundaries of an image. MAXIMUM_LATITUDE and MINIMUM_LATITUDE specify the latitude boundaries of the image, and EASTERNMOST_LONGITUDE and WESTERNMOST_LONGITUDE specify the longitudinal boundaries of the map.

Definitions of other mapping parameters can be found in the PDS Data Dictionary.

Polar Stereographic Projections

For the latitude bands projected polar stereographically, projection is centered on the north or south pole. Lines of longitude extend radially from the pole and parallels of latitude are concentric circles around the center. In the north, longitude 0 extends straight down from the center and Longitude 90 East extends to the right. In the south, longitude 0 extends straight up from the center, and longitude 90 East extends to the right. Thus in any given tile, north is at a variable orientation in LINE-SAMPLE space. The transformation from line and sample coordinates to planetocentric latitude and longitude is given by these equations.

x = (SAMPLE - SAMPLE_PROJECTION_OFFSET - 0.5) * MAP_SCALE

y = (LINE - LINE_PROJECTION_OFFSET - 0.5) * -1 * MAP_SCALE

rho = sqrt(x^2 + y^2)

(if rho=0, lat,lon is the reference pole)

c = 2 * atan(rho/(2*(A_AXIS_RADIUS*1000)))

lon = CENTER_LONGITUDE + (atan2(x,-y) * 180/pi) (northern hemisphere)

lon = CENTER_LONGITUDE + (atan2(x,y) * 180/pi) (southern hemisphere)

lat = 180/pi * arcsin[cos(c)*sin(CENTER_LATITUDE*pi/180) +

(y*sin(c)*cos(CENTER_LATITUDE*pi/180)/rho)]

where lat = latitude in degrees and lon = longitude in degrees.

LINE_PROJECTION_OFFSET = the line offset value of the map projection origin from the line and sample 1,1 (line and sample 1,1 is considered the upper left corner of the digital array).

SAMPLE_PROJECTION_OFFSET = the sample offset value of the map projection origin from line and sample 1,1 (line and sample 1,1 is considered the upper left corner of the digital array).

MAP_SCALE is measured in m/pixel.

There are four PDS parameters that specify the latitude and longitude boundaries of an image. MAXIMUM_LATITUDE and MINIMUM_LATITUDE specify the latitude boundaries of the image, and EASTERNMOST_LONGITUDE and WESTERNMOST_LONGITUDE specify the longitudinal boundaries of the map.

Definitions of other mapping parameters can be found in the PDS Data Dictionary.

3.3.9.4 MD3 Label Description

The detached label conforms to PDS version 3.7 standards (Applicable Document 3). The purpose of the PDS label is to describe the data product. A single label points to 1 or 2 files, the IMG file and the HDR file if it is present. Sample MD3 labels can be found in Appendix G. Table 3-13 below lists MDIS-specific values for MD3 label keywords. See Appendix B for keyword descriptions.

Keyword	Valid Values
INSTRUMENT_ID	“MDIS-WAC”
PRODUCT_TYPE	MAP_PROJECTED_MD3
UNIT	“Reflectance”
BAND_NAME	"WAC FILTER 6 430 BP 40" "WAC FILTER 7 750 BP 5" "WAC FILTER 9 1000 BP 15" “OBSERVATION ID” “MDR METRIC” "SOLAR INCIDENCE ANGLE" "EMISSION ANGLE" "PHASE ANGLE”

Table 3-13. MDIS-specific values for MD3 label keywords. Reflectance is at i=30°, e=0°, g=30°.

3.3.10 MP5 Directory (MP5 Volumes Only)

The 5-color MDIS image mosaic of Mercury's north polar latitudes is divided into non-overlapping, 128 pixel/degree tiles (MP5s). Each tile corresponds to the NW, NE, SW, or SE quadrant of one of the pre-existing Mercury non-polar charts, or the north polar chart. For each MP5, 2 or 3 files may be present.

3.3.10.1 MP5 File Naming

The file names developed for this PDS archive are restricted to a maximum 36-character base name and 3 character extension name with a period separating the file and extension names. Also known as the "36.3" format, this is compliant with the ISO 9660 Level 2 specification (maximum of 40 characters), which is required by PDS. The MDIS MP5 products have a "22.3" format and thus remain within the PDS specification parameters. Below is the detailed naming convention for this dataset.

Map tiles are named based on the quadrant of the Mercury chart they span.

Format: "MDIS_ppp_rrrPPD_Hxxddv.ext"

ppp = product type = MP5
rrr = resolution in pixels/degree (PPD)
Hxx = Mercury chart designation
dd = quadrant within Mercury chart (NW, NE, SW, or SE), or a polar chart (NP, SP)
v = version number
ext = IMG for the multiband image, LBL for the detached label, and HDR for an ENVI header that may also be present. The ENVI header facilitates ingestion of the MP5 into ENVI software.

The following is an example file name with a description of the individual components:

MDIS_MP5_128PPD_H03NE0.IMG

For this image:

- Product type = MP5 (**MP5**)
- Resolution = 128 pixels/degree (**128PPD**)
- Mercury chart = Shakespeare (**H03**)
- Quadrant = Northeast (**NE**)
- Version = 0

3.3.10.2 MP5 Structure and Organization

The MP5 directory, present in the MP5 archive volume, contains 5-color MDIS Map Projected Multispectral Reduced Data Records (MP5s). The MP5s are organized into subdirectories based on the Mercury Chart containing the MDR. Latitude and longitude limits of Mercury Charts and the corresponding subdirectory names are given in Table 3-10.

An MP5:

- Consists of an uncontrolled mosaic of map-projected, photometrically normalized I/F CDRs collectively forming a multispectral map tile.

- Contains image data in I/F corrected photometrically to i=30°, e=0°, g=30° at a resolution of 128 pixels per degree (~332 m/pixel at the equator).
- Represents one latitude-longitude bin in a regional color map.
- Is composed of up 5 bands corresponding to 5 of the 11 WAC filters. The 5 filters provide improved spectral sampling of color variations in the Northern Volcanic Plains geologic unit compared to the MD3 data product, and twice the spatial resolution of the MDR data product.
- Contains 5 backplanes for the reference 750-nm band: (a) observation id, (b) MDR metric, (c) solar incidence angle, (d) emission angle, and (e) phase angle. "MDR metric" is a metric describing the resolution and illumination of data used to determine where and whether to overlay future imaging coverage (see section 2.5.2.3), modified for the different limiting spatial resolution.
- Is accompanied by a label and possibly by an ENVI header.

Versions increment on reprocessing or addition of new data. Polar tiles are in polar stereographic projections, other tiles in equirectangular projection.

See section 2.5.2.3 for a description of how the MP5 products are generated.

3.3.10.3 MP5 Map Projection Standards

The projection convention adopted by the MESSENGER project is planetocentric, positive east, using the prime meridian and pole of rotation described in Davies et al. [1976, Applicable Document 12]. The projection varies with latitude, using EQUIRECTANGULAR for tiles centered equatorward of 65 degrees latitude, and POLAR STEREOGRAPHIC centered poleward of 65 degrees latitude.

<u>Equirectangular Projections</u>

For the latitude band projected equirectangularly, the CENTER_LATITUDE of projection is the equatorward boundary of each band to minimize 'distortion.' The transformation from line and sample coordinates to planetocentric latitude and longitude is given by these equations.

x = (SAMPLE - SAMPLE_PROJECTION_OFFSET - 0.5) * MAP_SCALE

y = (LINE - LINE_PROJECTION_OFFSET - 0.5) * -1 * MAP_SCALE

lat = y / (A_AXIS_RADIUS * 1000)

lon = CENTER_LONGITUDE +

180/pi * (x/(A_AXIS_RADIUS * 1000 * cos(CENTER_LATITUDE*pi/180))

Note that integral values of line and sample correspond to the center of a pixel. Lat and lon are the latitude and longitude of a given location on the surface, east positive.

MAP_SCALE= the map scale in meters per pixel, 332.678338 meters/pixel for an MP5, which achieves close to the desired 128 pixels/degree at the CENTER_LATITUDE.

LINE_PROJECTION_OFFSET = the line offset value of the map projection origin from the line and sample 1,1 (line and sample 1,1 is considered the upper left corner of the digital array). For an EQUIRECTANGULAR map projection, origin is the equatorward edge of the map tile. The value of LINE_PROJECTION_OFFSET is positive for images starting north of the equator and is negative for images starting south of the equator.

SAMPLE_PROJECTION_OFFSET = the sample offset value of the map projection origin from line and sample 1,1 (line and sample 1,1 is considered the upper left corner of the digital array). For an EQUIRECTANGULAR map projection, the value of SAMPLE_PROJECTION_OFFSET is positive for images starting to the west of the projection longitude and is negative for images starting to the east of the projection longitude.

MAP_RESOLUTION is measured in pixels/degree.

There are four PDS parameters that specify the latitude and longitude boundaries of an image. MAXIMUM_LATITUDE and MINIMUM_LATITUDE specify the latitude boundaries of the image, and EASTERNMOST_LONGITUDE and WESTERNMOST_LONGITUDE specify the longitudinal boundaries of the map.

Definitions of other mapping parameters can be found in the PDS Data Dictionary.

Polar Stereographic Projections

For the latitude bands projected polar stereographically, projection is centered on the north or south pole. Lines of longitude extend radially from the pole and parallels of latitude are concentric circles around the center. In the north, longitude 0 extends straight down from the center and Longitude 90 East extends to the right. In the south, longitude 0 extends straight up from the center, and longitude 90 East extends to the right. Thus in any given tile, north is at a variable orientation in LINE-SAMPLE space. The transformation from line and sample coordinates to planetocentric latitude and longitude is given by these equations.

x = (SAMPLE - SAMPLE_PROJECTION_OFFSET - 0.5) * MAP_SCALE

y = (LINE - LINE_PROJECTION_OFFSET - 0.5) * -1 * MAP_SCALE

rho = sqrt(x^2 + y^2)

(if rho=0, lat,lon is the reference pole)

c = 2 * atan(rho/(2*(A_AXIS_RADIUS*1000)))

lon = CENTER_LONGITUDE + (atan2(x,-y) * 180/pi) (northern hemisphere)

lon = CENTER_LONGITUDE + (atan2(x,y) * 180/pi) (southern hemisphere)

lat = 180/pi * arcsin[cos(c)*sin(CENTER_LATITUDE*pi/180) +

(y*sin(c)*cos(CENTER_LATITUDE*pi/180)/rho)]

where lat = latitude in degrees and lon = longitude in degrees.

LINE_PROJECTION_OFFSET = the line offset value of the map projection origin from the line and sample 1,1 (line and sample 1,1 is considered the upper left corner of the digital array).

SAMPLE_PROJECTION_OFFSET = the sample offset value of the map projection origin from line and sample 1,1 (line and sample 1,1 is considered the upper left corner of the digital array).

MAP_SCALE is measured in m/pixel.

There are four PDS parameters that specify the latitude and longitude boundaries of an image. MAXIMUM_LATITUDE and MINIMUM_LATITUDE specify the latitude boundaries of the image, and EASTERNMOST_LONGITUDE and WESTERNMOST_LONGITUDE specify the longitudinal boundaries of the map.

Definitions of other mapping parameters can be found in the PDS Data Dictionary.

3.3.10.4 MP5 Label Description

The detached label conforms to PDS version 3.7 standards (Applicable Document 3). The purpose of the PDS label is to describe the data product. A single label points to 1 or 2 files, the IMG file and the HDR file if it is present. Sample MP5 labels can be found in Appendix H. Table 3-14 below lists MDIS-specific values for MP5 label keywords. See Appendix B for keyword descriptions.

Keyword	Valid Values
INSTRUMENT_ID	“MDIS-WAC”
PRODUCT_TYPE	MAP_PROJECTED_MP5
UNIT	“Reflectance”
BAND_NAME	"WAC FILTER 6 430 BP 40" "WAC FILTER 4 560 BP 5" "WAC FILTER 7 750 BP 5" "WAC FILTER 12 830 BP 5" "WAC FILTER 9 1000 BP 15" “OBSERVATION ID” “MDR METRIC” "SOLAR INCIDENCE ANGLE" "EMISSION ANGLE" "PHASE ANGLE”

Table 3-14. MDIS-specific values for MP5 label keywords. Reflectance is at i=30°, e=0°, g=30°.

3.3.11 HIE Directory (HIE Volumes Only)

MDIS near-nadir high incidence angle basemap imaging of Mercury illuminated from the east is mosaicked into 54 non-overlapping, 256 pixel/degree tiles (HIEs). Each tile corresponds to the NW, NE, SW, or, SE quadrant of one of the pre-existing Mercury non-polar charts or one of the two polar charts. For each HIE, 2 or 3 files may be present.

3.3.11.1 HIE File Naming

The file names developed for this PDS archive are restricted to a maximum 36-character base name and 3 character extension name with a period separating the file and extension names. Also known as the “36.3” format, this is compliant with the ISO 9660 Level 2 specification (maximum of 40 characters), which is required by PDS. The MDIS HIE products have a “22.3” format and thus remain within the PDS specification parameters. Below is the detailed naming convention for this dataset.

Map tiles are named based on the quadrant of the Mercury chart they span.

Format: "MDIS_ppp_rrrPPD_Hxxddv.ext"

ppp = product type = HIE
rrr = resolution in pixels/degree (PPD)
Hxx = Mercury chart designation
dd = quadrant within Mercury chart (NW, NE, SW, or SE), or a polar chart (NP, SP)
v = version number
ext = IMG for the multiband image, LBL for the detached label, and HDR for an ENVI header that may also be present. The ENVI header facilitates ingestion of the HIE into ENVI software.

The following is an example file name with a description of the individual components:

MDIS_HIE_256PPD_H03NE0.IMG

For this image:
- Product type = HIE (**HIE**)
- Resolution = 256 pixels/degree (**256PPD**)
- Mercury chart = Shakespeare (**H03**)
- Quadrant = Northeast (**NE**)
- Version = 0

3.3.11.2 HIE Structure and Organization

The HIE directory, present in the HIE archive volume, contains MDIS Map Projected High Incidence Angle Basemap Illuminated from the East Reduced Data Records (HIEs). The HIEs are organized into subdirectories based on the Mercury Chart containing the HIE. Latitude and longitude limits of Mercury Charts and the corresponding subdirectory names are given in Table 3-10.

An HIE:

- Consists of an uncontrolled mosaic of map-projected, photometrically normalized I/F CDRs collectively forming a monochrome map tile. Only those images taken as part of the high-incidence angle campaign and having a value of SUB_SOLAR_LONGITUDE located eastward of the image CENTER_LONGITUDE (section 2.3.3.1) are included.
- Contains image data in I/F corrected photometrically to i=30°, e=0°, g=30° sampled at a scale of 256 pixels per degree (~166 meters/pixel at the equator), composed of WAC filter 7 (G) (750 BP 5) and NAC images.
- Represents one latitude-longitude bin in a global map.
- Contains 5 backplanes: (a) observation id, (b) the BDR metric adjusted for the optimal incidence angle to be 78° instead of 68°, (c) solar incidence angle, (d) emission angle, and (e) phase angle. “BDR metric” is a metric describing the resolution and illumination of data used to determine where and whether to overlay future imaging coverage (see section 2.5.2.3).

- Is accompanied by a label and possibly by an ENVI header.

Versions increment on reprocessing or addition of new data. Polar tiles are in polar stereographic projections, other tiles in equirectangular projection.

See section 2.5.2.3 for a description of how the HIE products are generated.

3.3.11.3 HIE Map Projection Standards

The projection convention adopted by the MESSENGER project is planetocentric, positive east, using the prime meridian and pole of rotation described in Davies et al. [1976, Applicable Document 12]. The projection varies with latitude, using EQUIRECTANGULAR for tiles centered equatorward of 65 degrees latitude, and POLAR STEREOGRAPHIC centered poleward of 65 degrees latitude.

<u>Equirectangular Projections</u>

For the latitude band projected equirectangularly, the CENTER_LATITUDE of projection is the equatorward boundary of each band to minimize 'distortion.' The transformation from line and sample coordinates to planetocentric latitude and longitude is given by these equations.

x = (SAMPLE - SAMPLE_PROJECTION_OFFSET - 0.5) * MAP_SCALE

y = (LINE - LINE_PROJECTION_OFFSET - 0.5) * -1 * MAP_SCALE

lat = y / (A_AXIS_RADIUS * 1000)

lon = CENTER_LONGITUDE +

180/pi * (x/(A_AXIS_RADIUS * 1000 * cos(CENTER_LATITUDE*pi/180))

Note that integral values of line and sample correspond to the center of a pixel. Lat and lon are the latitude and longitude of a given location on the surface, east positive.

MAP_SCALE= the map scale in meters per pixel, 166.339169 meters/pixel for an HIE, which achieves close to the desired 256 pixels/degree at the CENTER_LATITUDE.

LINE_PROJECTION_OFFSET = the line offset value of the map projection origin from the line and sample 1,1 (line and sample 1,1 is considered the upper left corner of the digital array). For an EQUIRECTANGULAR map projection, origin is the equatorward edge of the map tile. The value of LINE_PROJECTION_OFFSET is positive for images starting north of the equator and is negative for images starting south of the equator.

SAMPLE_PROJECTION_OFFSET = the sample offset value of the map projection origin from line and sample 1,1 (line and sample 1,1 is considered the upper left corner of the digital array). For an EQUIRECTANGULAR map projection, the value of SAMPLE_PROJECTION_OFFSET is positive for images starting to the west of the projection longitude and is negative for images starting to the east of the projection longitude.

MAP_RESOLUTION is measured in pixels/degree.

There are four PDS parameters that specify the latitude and longitude boundaries of an image. MAXIMUM_LATITUDE and MINIMUM_LATITUDE specify the latitude boundaries of the

image, and EASTERNMOST_LONGITUDE and WESTERNMOST_LONGITUDE specify the longitudinal boundaries of the map.

Definitions of other mapping parameters can be found in the PDS Data Dictionary.

Polar Stereographic Projections

For the latitude bands projected polar stereographically, projection is centered on the north or south pole. Lines of longitude extend radially from the pole and parallels of latitude are concentric circles around the center. In the north, longitude 0 extends straight down from the center and Longitude 90 East extends to the right. In the south, longitude 0 extends straight up from the center, and longitude 90 East extends to the right. Thus in any given tile, north is at a variable orientation in LINE-SAMPLE space. The transformation from line and sample coordinates to planetocentric latitude and longitude is given by these equations.

x = (SAMPLE - SAMPLE_PROJECTION_OFFSET - 0.5) * MAP_SCALE

y = (LINE - LINE_PROJECTION_OFFSET - 0.5) * -1 * MAP_SCALE

rho = sqrt(x^2 + y^2)

(if rho=0, lat,lon is the reference pole)

c = 2 * atan(rho/(2*(A_AXIS_RADIUS*1000)))

lon = CENTER_LONGITUDE + (atan2(x,-y) * 180/pi) (northern hemisphere)

lon = CENTER_LONGITUDE + (atan2(x,y) * 180/pi) (southern hemisphere)

lat = 180/pi * arcsin[cos(c)*sin(CENTER_LATITUDE*pi/180) +

(y*sin(c)*cos(CENTER_LATITUDE*pi/180)/rho)]

where lat = latitude in degrees and lon = longitude in degrees.

LINE_PROJECTION_OFFSET = the line offset value of the map projection origin from the line and sample 1,1 (line and sample 1,1 is considered the upper left corner of the digital array).

SAMPLE_PROJECTION_OFFSET = the sample offset value of the map projection origin from line and sample 1,1 (line and sample 1,1 is considered the upper left corner of the digital array).

MAP_SCALE is measured in m/pixel.

There are four PDS parameters that specify the latitude and longitude boundaries of an image. MAXIMUM_LATITUDE and MINIMUM_LATITUDE specify the latitude boundaries of the image, and EASTERNMOST_LONGITUDE and WESTERNMOST_LONGITUDE specify the longitudinal boundaries of the map.

Definitions of other mapping parameters can be found in the PDS Data Dictionary.

3.3.11.4 HIE Label Description

The detached label conforms to PDS version 3.7 standards (Applicable Document 3). The purpose of the PDS label is to describe the data product. A single label points to 1 or 2 files, the IMG file and the HDR file if it is present. Sample HIE labels can be found in Appendix I. Table

3-15 below lists MDIS-specific values for HIE label keywords. See Appendix B for keyword descriptions.

Keyword	Valid Values
INSTRUMENT_ID	“MDIS-WAC” “MDIS-NAC”
PRODUCT_TYPE	MAP_PROJECTED_HIE
UNIT	“Reflectance”
BAND_NAME	“REFLECTANCE 750NM” “OBSERVATION ID” “BDR METRIC” "SOLAR INCIDENCE ANGLE" "EMISSION ANGLE" "PHASE ANGLE”

Table 3-15. MDIS-specific values for HIE label keywords. Reflectance is at i=30°, e=0°, g=30°.

3.3.12 HIW Directory (HIW Volumes Only)

MDIS near-nadir high incidence angle basemap imaging of Mercury illuminated from the west is mosaicked into 54 non-overlapping, 256 pixel/degree tiles (HIWs). Each tile corresponds to the NW, NE, SW, or, SE quadrant of one of the pre-existing Mercury non-polar charts or one of the two polar charts. For each HIW, 2 or 3 files may be present.

3.3.12.1 HIW File Naming

The file names developed for this PDS archive are restricted to a maximum 36-character base name and 3 character extension name with a period separating the file and extension names. Also known as the “36.3” format, this is compliant with the ISO 9660 Level 2 specification (maximum of 40 characters), which is required by PDS. The MDIS HIW products have a “22.3” format and thus remain within the PDS specification parameters. Below is the detailed naming convention for this dataset.

Map tiles are named based on the quadrant of the Mercury chart they span.

Format: "MDIS_ppp_rrrPPD_Hxxddv.ext"

ppp = product type = HIW
rrr = resolution in pixels/degree (PPD)
Hxx = Mercury chart designation
dd = quadrant within Mercury chart (NW, NE, SW, or SE), or a polar chart (NP, SP)
v = version number
ext = IMG for the multiband image, LBL for the detached label, and HDR for an ENVI header that may also be present. The ENVI header facilitates ingestion of the HIW into ENVI software.

The following is an example file name with a description of the individual components:

MDIS_HIW_256PPD_H03NE0.IMG

For this image:

- Product type = HIW (**HIW**)

- Resolution = 256 pixels/degree (**256PPD**)
- Mercury chart = Shakespeare (**H03**)
- Quadrant = Northeast (**NE**)
- Version = 0
- Is accompanied by a label and possibly by an ENVI header.

3.3.12.2 HIW Structure and Organization

The HIW directory, present in the HIW archive volume, contains MDIS Map Projected High Incidence Angle Basemap Illuminated from the West Reduced Data Records (HIWs). The HIWs are organized into subdirectories based on the Mercury Chart containing the HIW. Latitude and longitude limits of Mercury Charts and the corresponding subdirectory names are given in Table 3-10.

An HIW:

- Consists of an uncontrolled mosaic of map-projected, photometrically normalized I/F CDRs collectively forming a monochrome map tile. Only those images taken as part of the high-incidence angle campaign and having a value of SUB_SOLAR_LONGITUDE located westward of the image CENTER_LONGITUDE (section 2.3.3.1) are included.
- Contains image data in I/F corrected photometrically to i=30°, e=0°, g=30° sampled at a scale of 256 pixels per degree (~166 meters/pixel at the equator), composed of WAC filter 7 (G) (750 BP 5) and NAC images.
- Represents one latitude-longitude bin in a global map.
- Contains 5 backplanes: (a) observation id, (b) the BDR metric adjusted for the optimal incidence angle to be 78° instead of 68°, (c) solar incidence angle, (d) emission angle, and (e) phase angle. "BDR metric" is a metric describing the resolution and illumination of data used to determine where and whether to overlay future imaging coverage (see section 2.5.2.3).
- Is accompanied by a label and possibly by an ENVI header.

Versions increment on reprocessing or addition of new data. Polar tiles are in polar stereographic projections, other tiles in equirectangular projection.

See section 2.5.2.3 for a description of how the HIW products are generated.

3.3.12.3 HIW Map Projection Standards

The projection convention adopted by the MESSENGER project is planetocentric, positive east, using the prime meridian and pole of rotation described in Davies et al. [1976, Applicable Document 12]. The projection varies with latitude, using EQUIRECTANGULAR for tiles centered equatorward of 65 degrees latitude, and POLAR STEREOGRAPHIC centered poleward of 65 degrees latitude.

<u>Equirectangular Projections</u>

For the latitude band projected equirectangularly, the CENTER_LATITUDE of projection is the equatorward boundary of each band to minimize 'distortion.' The transformation from line and sample coordinates to planetocentric latitude and longitude is given by these equations.

x = (SAMPLE - SAMPLE_PROJECTION_OFFSET - 0.5) * MAP_SCALE

y = (LINE - LINE_PROJECTION_OFFSET - 0.5) * -1 * MAP_SCALE

lat = y / (A_AXIS_RADIUS * 1000)

lon = CENTER_LONGITUDE +

180/pi * (x/(A_AXIS_RADIUS * 1000 * cos(CENTER_LATITUDE*pi/180))

Note that integral values of line and sample correspond to the center of a pixel. Lat and lon are the latitude and longitude of a given location on the surface, east positive.

MAP_SCALE= the map scale in meters per pixel, 166.339169 meters/pixel for an HIW, which achieves close to the desired 256 pixels/degree at the CENTER_LATITUDE.

LINE_PROJECTION_OFFSET = the line offset value of the map projection origin from the line and sample 1,1 (line and sample 1,1 is considered the upper left corner of the digital array). For an EQUIRECTANGULAR map projection, origin is the equatorward edge of the map tile. The value of LINE_PROJECTION_OFFSET is positive for images starting north of the equator and is negative for images starting south of the equator.

SAMPLE_PROJECTION_OFFSET = the sample offset value of the map projection origin from line and sample 1,1 (line and sample 1,1 is considered the upper left corner of the digital array). For an EQUIRECTANGULAR map projection, the value of SAMPLE_PROJECTION_OFFSET is positive for images starting to the west of the projection longitude and is negative for images starting to the east of the projection longitude.

MAP_RESOLUTION is measured in pixels/degree.

There are four PDS parameters that specify the latitude and longitude boundaries of an image. MAXIMUM_LATITUDE and MINIMUM_LATITUDE specify the latitude boundaries of the image, and EASTERNMOST_LONGITUDE and WESTERNMOST_LONGITUDE specify the longitudinal boundaries of the map.

Definitions of other mapping parameters can be found in the PDS Data Dictionary.

Polar Stereographic Projections

For the latitude bands projected polar stereographically, projection is centered on the north or south pole. Lines of longitude extend radially from the pole and parallels of latitude are concentric circles around the center. In the north, longitude 0 extends straight down from the center and Longitude 90 East extends to the right. In the south, longitude 0 extends straight up from the center, and longitude 90 East extends to the right. Thus in any given tile, north is at a variable orientation in LINE-SAMPLE space. The transformation from line and sample coordinates to planetocentric latitude and longitude is given by these equations.

x = (SAMPLE - SAMPLE_PROJECTION_OFFSET - 0.5) * MAP_SCALE

y = (LINE - LINE_PROJECTION_OFFSET - 0.5) * -1 * MAP_SCALE

rho = sqrt(x^2 + y^2)

(if rho=0, lat,lon is the reference pole)

c = 2 * atan(rho/(2*(A_AXIS_RADIUS*1000)))

lon = CENTER_LONGITUDE + (atan2(x,-y) * 180/pi) (northern hemisphere)

lon = CENTER_LONGITUDE + (atan2(x,y) * 180/pi) (southern hemisphere)

lat = 180/pi * arcsin[cos(c)*sin(CENTER_LATITUDE*pi/180) +

(y*sin(c)*cos(CENTER_LATITUDE*pi/180)/rho)]

where lat = latitude in degrees and lon = longitude in degrees.

LINE_PROJECTION_OFFSET = the line offset value of the map projection origin from the line and sample 1,1 (line and sample 1,1 is considered the upper left corner of the digital array).

SAMPLE_PROJECTION_OFFSET = the sample offset value of the map projection origin from line and sample 1,1 (line and sample 1,1 is considered the upper left corner of the digital array).

MAP_SCALE is measured in m/pixel.

There are four PDS parameters that specify the latitude and longitude boundaries of an image. MAXIMUM_LATITUDE and MINIMUM_LATITUDE specify the latitude boundaries of the image, and EASTERNMOST_LONGITUDE and WESTERNMOST_LONGITUDE specify the longitudinal boundaries of the map.

Definitions of other mapping parameters can be found in the PDS Data Dictionary.

3.3.12.4 HIW Label Description

The detached label conforms to PDS version 3.7 standards (Applicable Document 3). The purpose of the PDS label is to describe the data product. A single label points to 1 or 2 files, the IMG file and the HDR file if it is present. Sample HIW labels can be found in Appendix J. Table 3-16 below lists MDIS-specific values for HIW label keywords. See Appendix B for keyword descriptions.

Keyword	Valid Values
INSTRUMENT_ID	“MDIS-WAC” “MDIS-NAC”
PRODUCT_TYPE	MAP_PROJECTED_HIW
UNIT	“Reflectance”
BAND_NAME	“REFLECTANCE 750NM” “OBSERVATION ID” “BDR METRIC” "SOLAR INCIDENCE ANGLE" "EMISSION ANGLE" "PHASE ANGLE”

Table 3-16. MDIS-specific values for HIW label keywords. Reflectance is at i=30°, e=0°, g=30°.

3.3.13 LOI Directory (LOI Volumes Only)

MDIS near-nadir low incidence angle basemap imaging of Mercury is mosaicked into 54 non-overlapping, 256 pixel/degree tiles (LOIs). Each tile corresponds to the NW, NE, SW, or, SE quadrant of one of the pre-existing Mercury non-polar charts or one of the two polar charts. For each HIW, 2 or 3 files may be present.

3.3.13.1 LOI File Naming

The file names developed for this PDS archive are restricted to a maximum 36-character base name and 3 character extension name with a period separating the file and extension names. Also known as the "36.3" format, this is compliant with the ISO 9660 Level 2 specification (maximum of 40 characters), which is required by PDS. The MDIS LOI products have a "22.3" format and thus remain within the PDS specification parameters. Below is the detailed naming convention for this dataset.

Map tiles are named based on the quadrant of the Mercury chart they span.

Format: "MDIS_ppp_rrrPPD_Hxxddv.ext"

ppp = product type = LOI
rrr = resolution in pixels/degree (PPD)
Hxx = Mercury chart designation
dd = quadrant within Mercury chart (NW, NE, SW, or SE), or a polar chart (NP, SP)
v = version number
ext = IMG for the multiband image, LBL for the detached label, and HDR for an ENVI header that may also be present. The ENVI header facilitates ingestion of the LOI into ENVI software.

The following is an example file name with a description of the individual components:

MDIS_LOI_256PPD_H03NE0.IMG

For this image:

- Product type = LOI (**LOI**)
- Resolution = 256 pixels/degree (**256PPD**)
- Mercury chart = Shakespeare (**H03**)
- Quadrant = Northeast (**NE**)
- Version = 0

3.3.13.2 LOI Structure and Organization

The LOI directory, present in the LOI archive volume, contains MDIS Map Projected Low Incidence Angle Basemap Reduced Data Records (LOIs). The LOIs are organized into subdirectories based on the Mercury Chart containing the LOI. Latitude and longitude limits of Mercury Charts and the corresponding subdirectory names are given in Table 3-10.

An LOI:

- Consists of an uncontrolled mosaic of map-projected, photometrically normalized I/F CDRs collectively forming a monochrome map tile. Only those images taken as part of the near-nadir part of the low-incidence angle campaign are included.
- Contains image data in I/F corrected photometrically to i=30°, e=0°, g=30° sampled at a scale of 256 pixels per degree (~166 meters/pixel at the equator), composed of WAC filter 7 (G) (750 BP 5) and NAC images.
- Represents one latitude-longitude bin in a global map.
- Contains 5 backplanes: (a) observation id, (b) the MDR metric adjusted for the different limiting resolution, (c) solar incidence angle, (d) emission angle, and (e) phase angle. "MDR metric" is a metric describing the resolution and illumination of data used, to determine where and whether to overlay future imaging coverage (see section 2.5.2.3).
- Is accompanied by a label and possibly by an ENVI header.

Versions increment on reprocessing or addition of new data. Polar tiles are in polar stereographic projections, other tiles in equirectangular projection.

See section 2.5.2.3 for a description of how the LOI products are generated.

3.3.13.3 LOI Map Projection Standards

The projection convention adopted by the MESSENGER project is planetocentric, positive east, using the prime meridian and pole of rotation described in Davies et al. [1976, Applicable Document 12]. The projection varies with latitude, using EQUIRECTANGULAR for tiles centered equatorward of 65 degrees latitude, and POLAR STEREOGRAPHIC centered poleward of 65 degrees latitude.

<u>Equirectangular Projections</u>

For the latitude band projected equirectangularly, the CENTER_LATITUDE of projection is the equatorward boundary of each band to minimize 'distortion.' The transformation from line and sample coordinates to planetocentric latitude and longitude is given by these equations.

x = (SAMPLE - SAMPLE_PROJECTION_OFFSET - 0.5) * MAP_SCALE

y = (LINE - LINE_PROJECTION_OFFSET - 0.5) * -1 * MAP_SCALE

lat = y / (A_AXIS_RADIUS * 1000)

lon = CENTER_LONGITUDE +

180/pi * (x/(A_AXIS_RADIUS * 1000 * cos(CENTER_LATITUDE*pi/180))

Note that integral values of line and sample correspond to the center of a pixel. Lat and lon are the latitude and longitude of a given location on the surface, east positive.

MAP_SCALE= the map scale in meters per pixel, 166.339169 meters/pixel for an LOI, which achieves close to the desired 256 pixels/degree at the CENTER_LATITUDE.

LINE_PROJECTION_OFFSET = the line offset value of the map projection origin from the line and sample 1,1 (line and sample 1,1 is considered the upper left corner of the digital array). For an EQUIRECTANGULAR map projection, origin is the equatorward edge of the

map tile. The value of LINE_PROJECTION_OFFSET is positive for images starting north of the equator and is negative for images starting south of the equator.

SAMPLE_PROJECTION_OFFSET = the sample offset value of the map projection origin from line and sample 1,1 (line and sample 1,1 is considered the upper left corner of the digital array). For an EQUIRECTANGULAR map projection, the value of SAMPLE_PROJECTION_OFFSET is positive for images starting to the west of the projection longitude and is negative for images starting to the east of the projection longitude.

MAP_RESOLUTION is measured in pixels/degree.

There are four PDS parameters that specify the latitude and longitude boundaries of an image. MAXIMUM_LATITUDE and MINIMUM_LATITUDE specify the latitude boundaries of the image, and EASTERNMOST_LONGITUDE and WESTERNMOST_LONGITUDE specify the longitudinal boundaries of the map.

Definitions of other mapping parameters can be found in the PDS Data Dictionary.

Polar Stereographic Projections

For the latitude bands projected polar stereographically, projection is centered on the north or south pole. Lines of longitude extend radially from the pole and parallels of latitude are concentric circles around the center. In the north, longitude 0 extends straight down from the center and Longitude 90 East extends to the right. In the south, longitude 0 extends straight up from the center, and longitude 90 East extends to the right. Thus in any given tile, north is at a variable orientation in LINE-SAMPLE space. The transformation from line and sample coordinates to planetocentric latitude and longitude is given by these equations.

x = (SAMPLE - SAMPLE_PROJECTION_OFFSET - 0.5) * MAP_SCALE

y = (LINE - LINE_PROJECTION_OFFSET - 0.5) * -1 * MAP_SCALE

rho = sqrt(x^2 + y^2)

(if rho=0, lat,lon is the reference pole)

c = 2 * atan(rho/(2*(A_AXIS_RADIUS*1000)))

lon = CENTER_LONGITUDE + (atan2(x,-y) * 180/pi) (northern hemisphere)

lon = CENTER_LONGITUDE + (atan2(x,y) * 180/pi) (southern hemisphere)

lat = 180/pi * arcsin[cos(c)*sin(CENTER_LATITUDE*pi/180) +

(y*sin(c)*cos(CENTER_LATITUDE*pi/180)/rho)]

where lat = latitude in degrees and lon = longitude in degrees.

LINE_PROJECTION_OFFSET = the line offset value of the map projection origin from the line and sample 1,1 (line and sample 1,1 is considered the upper left corner of the digital array).

SAMPLE_PROJECTION_OFFSET = the sample offset value of the map projection origin from line and sample 1,1 (line and sample 1,1 is considered the upper left corner of the digital array).

MAP_SCALE is measured in m/pixel.

There are four PDS parameters that specify the latitude and longitude boundaries of an image. MAXIMUM_LATITUDE and MINIMUM_LATITUDE specify the latitude boundaries of the image, and EASTERNMOST_LONGITUDE and WESTERNMOST_LONGITUDE specify the longitudinal boundaries of the map.

Definitions of other mapping parameters can be found in the PDS Data Dictionary.

3.3.13.4 LOI Label Description

The detached label conforms to PDS version 3.7 standards (Applicable Document 3). The purpose of the PDS label is to describe the data product. A single label points to 1 or 2 files, the IMG file and the HDR file if it is present. Sample LOI labels can be found in Appendix K. Table 3-17 below lists MDIS-specific values for LOI label keywords. See Appendix B for keyword descriptions.

Keyword	Valid Values
INSTRUMENT_ID	“MDIS-WAC” “MDIS-NAC”
PRODUCT_TYPE	MAP_PROJECTED_LOI
UNIT	“Reflectance”
BAND_NAME	“REFLECTANCE 750NM” “OBSERVATION ID” “MDR METRIC” "SOLAR INCIDENCE ANGLE" "EMISSION ANGLE" "PHASE ANGLE”

Table 3-17. MDIS-specific values for LOI label keywords. Reflectance is at i=30°, e=0°, g=30°.

3.3.14 RTM Directory (RTM Volumes Only)

Key types of MDIS targeted observations are mosaicked into Regional Targeted Mosaics (RTMs). Unlike the global and regional mapping campaign map products, which are divided into a regular pattern of tiles based on Mercury Charts, each RTM is based on one MESSENGER Science Team-Defined "region of interest" that is the target of the images. That region of interest is encoded in the keyword SITE_ID and also appears in the PRODUCT_ID. It is referenced in a list of site IDs explaining the science motivation for their targeting, found in the EXTRAS directory. For each RTM, 2 or 3 files may be present.

3.3.14.1 RTM File Naming

The file names developed for this PDS archive are restricted to a maximum 36-character base name and 3 character extension name with a period separating the file and extension names. Also known as the “36.3” format, this is compliant with the ISO 9660 Level 2 specification (maximum of 40 characters), which is required by PDS. The MDIS RTM products have a “29.3” format and thus remain within the PDS specification parameters. Below is the detailed naming convention for this dataset.

RTM products are named based on their SITE_ID, OBSERVATION_ID, and image contents they contain.

Format: "MDIS_ppp_cbb_siteid_observationid_v.ext"

ppp = product type = RTM
c = camera (W WAC or N NAC)
bb = bands (01, 03, 08, 11 depending on type of observation)
siteid = a 6-digit integer giving the unique SITE_ID of the region covered by the product
observationid = image observation ID of the first image (lowest ID)
v = version number
ext = IMG for the multiband image, LBL for the detached label, and HDR for an ENVI header that may also be present. The ENVI header facilitates ingestion of the RTM into ENVI software.

The following is an example file name with a description of the individual components:

MDIS_RTM_N01_000276_1214047_0.IMG

For this image:

- Product type = RTM (**RTM**)
- Camera = NAC (**N**)
- Bands = 1 (**01**)
- SITE_ID = 276 (**000276**)
- OBSERVATION_ID = 1214047
- Version = 0

3.3.14.2 RTM Structure and Organization

The RTM directory, present in the RTM archive volume, contains MDIS Map Projected Regional Targeted Mosaics (RTMs). The RTMs are organized into subdirectories based on the camera/band (cbb from filename) and then within those subdirectories, by year and day of year on which the images were acquired, referencing the start image. The structure is generalized to allow for the fact that some targeted observations were taken with the NAC and some with the WAC, and that the number of WAC bands depends on the purpose of the observation (see sections 2.3.1.5, 2.3.1.6, 2.3.1.7, and 2.3.3.5).

An RTM:

- Consists of an uncontrolled mosaic of map-projected, photometrically normalized I/F CDRs. Only those images taken as part of coverage of a specific SITE_ID are included.
- Contains image data in I/F corrected photometrically to i=30°, e=0°, g=30° sampled at variable pixel scale depending on the observation.
- May contain 3 to 11 bands of WAC images or 1 band with one or more NAC images.
- Is a self-contained product and not part of a larger global map.
- NAC mosaics contain 4 backplanes: (a) observation id, (b) solar incidence angle, (c) emission angle, and (d) phase angle. WAC color products contain 3 backplanes: (a) solar incidence angle, (b) emission angle, and (c) phase angle.
- Is accompanied by a label and possibly by an ENVI header.

Versions increment on reprocessing. All products are in orthographic projection.

See section 2.5.2.3 for a description of how the RTM products are generated.

3.3.14.3 RTM Map Projection Standards

The projection convention adopted by the MESSENGER project is planetocentric, positive east, using the prime meridian and pole of rotation described in Davies et al. [1976, Applicable Document 12]. The projection varies with latitude, using ORTHOGRAPHIC for all RTM products.

The CENTER_LATITUDE and CENTER_LONGITUDE are at the origin of the Orthographic projection. CENTER_LATITUDE is also the latitude of the central point of the Orthographic projection.

The transformation from line and sample coordinates to planetocentric latitude and longitude is given by these equations.

x = (SAMPLE - SAMPLE_PROJECTION_OFFSET - 0.5) * MAP_SCALE

y = (LINE - LINE_PROJECTION_OFFSET - 0.5) * -1 * MAP_SCALE

rho = sqrt(x^2 + y^2)

(if rho=0, lat,lon is CENTER_LATITUDE,CENTER_LONGITUDE)

c = arcsin[rho/(A_AXIS_RADIUS * 1000)]

clatr = CENTER_LATITUDE * pi/180

lat = arcsin[cos(c) * sin(clatr) + (y * sin(c) * cos(clatr)/rho)]

lon = CENTER_LONGITUDE +

arctan[x*sin(c)/(rho*cos(clatr)*cos(c) - y*sin(clatr)*sin(c))]

where lat = latitude and lon = longitude, east positive.

LINE_PROJECTION_OFFSET = the line offset value of the map projection origin from the line and sample 1,1 (line and sample 1,1 is considered the upper left corner of the digital array). This is equivalent to the line number of at the center of the map minus the line number in the upper left corner.

SAMPLE_PROJECTION_OFFSET = the sample offset value of the map projection origin from line and sample 1,1 (line and sample 1,1 is considered the upper left corner of the digital array). This is equivalent to the sample number of at the center of the map minus the sample number in the upper left corner.

MAP_SCALE is measured in m/pixel.

There are four PDS parameters that specify the latitude and longitude boundaries of an image. MAXIMUM_LATITUDE and MINIMUM_LATITUDE specify the latitude boundaries of the image, and EASTERNMOST_LONGITUDE and WESTERNMOST_LONGITUDE specify the longitudinal boundaries of the map.

Definitions of other mapping parameters can be found in the PDS Data Dictionary.

3.3.14.4 RTM Label Description

The detached label conforms to PDS version 3.7 standards (Applicable Document 3). The purpose of the PDS label is to describe the data product. A single label points to 1 or 2 files, the IMG file and the HDR file if it is present. Sample RTM labels can be found in Appendix L. Table 3-18 below lists MDIS-specific values for RTM label keywords. See Appendix B for keyword descriptions.

Keyword	Valid Values
INSTRUMENT_ID	“MDIS-WAC” “MDIS-NAC”
PRODUCT_TYPE	MAP_PROJECTED_RTM
UNIT	“Reflectance”
BAND_NAME	"WAC FILTER 6 430 BP 40" "WAC FILTER 3 480 BP 10" "WAC FILTER 4 560 BP 5" "WAC FILTER 5 630 BP 5" "WAC FILTER 1 700 BP 5" "WAC FILTER 7 750 BP 5" "WAC FILTER 12 830 BP 5" "WAC FILTER 10 900 BP 5" "WAC FILTER 8 950 BP 7" "WAC FILTER 9 1000 BP 15" "WAC FILTER 11 1020 BP 40" “REFLECTANCE 750NM” “OBSERVATION ID” "SOLAR INCIDENCE ANGLE" "EMISSION ANGLE" "PHASE ANGLE”

Table 3-18. MDIS-specific values for RTM label keywords. Reflectance is at i=30°, e=0°, g=30°.

3.3.15 Calib Directory

The Calib directory (Table 3-19) contains the calibration files used in the processing of the raw data to create the CDRs or needed to use the data products on the volume. The EDR and CDR volumes contain all of the files listed in the table. The MD3, MDR, MP5, and RTM volumes contain only a subset of the files, those that may be useful for analysis of the respective data.

File Name		Req.?	File Contents
CALINFO.TXT		Yes	Describes the contents of this directory.
LUT_INVERT/		No	This directory contains the inverse lookup table required for inverting 8-bit images into their original 12-bit format.
	MDISLUTINV_0.TAB	No	This file contains 8-bit values, and the 12-bit values to which they correspond. There is one set of 12-bit values for each of the eight available lookup tables in the instrument.
	MDISLUTINV_0.LBL	No	The label that describes the preceding file.

File Name		Req.?	File Contents
DARK_MODEL/		No	This directory contains tables of coefficients needed to model the dark level in the NAC or WAC, with on-chip pixel binning turned on or not.
	MDIScam_bining_DARKMODEL_v.TAB	No	**cam** = camera, NAC or WAC **bining** = binning, NOTBIN or BINNED **v** = version number, 0-9, a-z
	MDIScam_bining_DARKMODEL_v.LBL	No	Detached labels describing the tables.
FLAT/		No	This directory contains flat-field images which correct for response variations from pixel to pixel and across the CCD. There are separate files for each of the 12 WAC filters and for the NAC, with on-chip pixel binning turned on or not.
	MDISWAC_bining_FLAT_FILT_nn_v.FIT	No	**bining** = binning, NOTBIN or BINNED **nn** = filter number, 1-12 **v** = version number, 0-9, a-z
	MDISWAC_bining_FLAT_FILT_nn_v.LBL	No	Detached labels describing the WAC flat-field images.
	MDISNAC_bining_FLAT_v.FIT	No	**bining** = binning, NOTBIN or BINNED **v** = version number, 0-9, a-z
	MDISNAC_bining_FLAT_v.LBL	No	Detached labels describing the NAC flat-field images.
RESPONSIVITY/		No	This directory contains tables of coefficients used to convert corrected DN to units of radiance. There are separate tables for the WAC and NAC, with on-chip pixel binning turned on or not.
	MDIScam_bining_RESP_v.TAB	No	**cam** = camera, NAC or WAC **bining** = binning, NOTBIN or BINNED **v** = version number, 0-9, a-z
	MDIScam_bining_RESP_v.LBL	No	Detached labels describing the tables.
CORRECT/		No	This directory contains tables of coefficients used to correct the radiance conversion for effects of contamination of WAC optics. There is one table for the WAC.
	MDISWAC_CORRECT_v.TAB	No	**v** = version number, 0-9, a-z
	MDISWAC_CORRECT_v.LBL	No	Detached labels describing the tables.

File Name		Req.?	File Contents
SOLAR/		No	This directory contains tables of solar irradiance used to convert radiance to units of I/F. There are separate tables for the WAC and NAC.
	MDIScam_SOLAR_v.TAB	No	**cam** = camera, NAC or WAC **v** = version number, 0-9, a-z
	MDIScam_SOLAR_v.LBL	No	Detached labels describing the tables.
SUPPORT/		No	This directory contains characterizations of the instrument that are not part of the calibration process per se, but were used to derive the calibration files that are used.
	MDISLUTFWD_0.TAB	No	Contains the onboard forward lookup tables used optionally to convert 12-bit to 8-bit images.
	MDISLUTFWD_0.LBL	No	The label that describes the preceding file.
	MDISBPcf.TAB	No	Tables giving bandpasses for each WAC filter and for the NAC. **c** = N for NAC, W for WAC **f** = A through M for different filters For the NAC, **f** = M For the WAC, **f** = A for Filter 1, 700 BP 5; B for Filter 2, 700 BP 600; C for Filter 3, 480 BP 10; D for Filter 4, 560 BP 5; E for Filter 5, 630 BP 5; F for Filter 6, 430 BP 40; G for Filter 7, 750 BP 5; H for Filter 8, 950 BP 7; I for Filter 9, 1000 BP 15; J for Filter 10, 900 BP 5; K for Filter 11, 1020 BP 40; L for Filter 12, 830 BP 5
	MDISBPWa.LBL	No	The label that describes the preceding file.

Table 3-19: Calib Directory Contents.

3.3.16 Browse Directory

The BROWSE directory contains synoptic versions of data products to help identify products of interest. Each set of browse products is organized into a separate subdirectory, within the BDR, MDR, MD3, MP5, HIE, HIW, LOI, and RTM archives. At the top of the directory structure, BROWINFO.TXT contains a description of the contents of this directory. Within each BROWSE directory the organization of subdirectories follows that of the directories containing the data products (e.g., BDR, MDR, etc.). All browse products have the same line and sample dimensions, pixel scale, and map projection as the parent data products.

Browse products nomenclature follows that of the parent data product, with the unique product ID appended with the string "_BR". For example, for the BDR file whose product ID is

MDIS_BDR_256PPD_H03NE0

the product ID for the corresponding browse product is

MDIS_BDR_256PPD_H03NE0_BR

Browse products are generated in two formats, each scaled from I/F in the parent IMG file, a Portable Network Graphics (PNG) format and a Geographic Tagged Image File Format (GeoTIFF). A single label points to and describes both files. Sample BROWSE image labels, when available, will be found in Appendices M-U.

3.3.16.1 Browse Products for BDR, HIE, HIW, and LOI Files

BDR, HIE, HIW, and LOI browse products are single-band gray-scale images whose parent data are a mix of NAC images and WAC 750-nm images. A different uniform, global stretch of reflectance at i=30°, e=0°, g=30° to an 8-bit integer is applied to each product type.

3.3.16.2 Browse Products for MDR, MD3, and MP5 Files

MDR, MD3, and MP5 browse products are 3-band RGB images, each constructed using data from WAC filters 9, 7, and 6 (1000, 750, and 430 nm) in the red, green and blue image planes. All three of these filters are present in all three of the data product types. A uniform, global stretch of reflectance at i=30°, e=0°, g=30° to an 8-bit integer is applied to all product types.

3.3.16.3 Browse Products for RTM Files

RTM browse products come in two types. Those constructed from 3-, 8-, or 11-color WAC targeted observations are 3-band RGB images, constructed using data from WAC filters 9, 7, and 6 (1000, 750, and 430 nm) in the red, green and blue image planes. A local stretch of reflectance at i=30°, e=0°, g=30° to an 8-bit integer specific to the individual RTM product is applied. Those constructed from NAC images are single-band gray-scale images. A local stretch of reflectance to an 8-bit integer specific to the individual RTM product is applied.

3.3.17 Extras Directory

The extras directory in the RTM archive contains a list of all SITE_IDs targeted by MDIS or other instruments, describing their latitude/longitude coordinates and the motivation for their targeting. This list is derived directly from the list of observing requests for targeted images compiled by the MESSENGER science and operations team and the original file had an uneven level of detail. The file EXTRINFO.TXT describes the contents of the file and the status of making parts of it more uniform and user friendly.

4. APPLICABLE SOFTWARE

4.1 Utility Programs

Standard Integrated Software for Imagers and Spectrometers (ISIS) tools (http://isis.astrogeology.usgs.gov/) can be used to work with the data. ISIS has the ability to calibrate EDRs, incorporate related SPICE files, and map-project images.

Environment for Visualizing Images (ENVI) software from Exelis, Inc. (http://www.exelisinc.com/solutions/ENVI/Pages/default.aspx) is widely used for analysis of multispectral data products such as MDRs, MD3s, MP5s, and WAC-derived RTMs. Later versions of these and other map-projected products may include ENVI headers (text files that encode geospatial and wavelength information on the data).

4.2 Applicable PDS Software Tools

PDS-labeled images and tables can be viewed with the program NASAView, developed by the PDS and available for a variety of computer platforms from the PDS web site http://pds.nasa.gov/tools/nasa-view.shtml.

4.3 Tutorial information

User tutorials on the details of MDIS data products and how to open and process them with ISIS and other software are available online at the PDS, at http://pds-imaging.jpl.nasa.gov/software/.

APPENDIX A. DATA ARCHIVE TERMS

Archive	An archive consists of one or more data sets along with all the documentation and ancillary information needed to understand and use the data. An archive is a logical construct independent of the medium on which it is stored.
Archive volume, archive volume set	A volume is a unit of medium on which data products are stored; for example, one DVD. An archive volume is a volume containing all or part of an archive; that is, data products plus documentation and ancillary files. When an archive spans multiple volumes, they are called an archive volume set. Usually the documentation and some ancillary files are repeated on each volume of the set, so that a single volume can be used alone.
Calibrated Data Records (CDRs)	Image data calibrated to radiance, or processed further to I/F or I/F corrected to i = 30º, e = 0º (NAC or WAC). CODMAC level 4.
Data Product	A labeled grouping of data resulting from a scientific observation, usually stored in one file. A product label identifies, describes, and defines the structure of the data. An example of a data product is a planetary image, a spectrum table, or a time series table.
Data Set	An accumulation of data products. A data set together with supporting documentation and ancillary files is an archive.
Derived Data Records (DDRs)	Geometric data registered to non-map-projected image data and used for correction from I/F to I/F corrected to i = 30º, e = 0º (NAC or WAC). CODMAC level 6.
Experiment Data Records (EDRs)	Non-map-projected raw data (NAC or WAC). CODMAC level 2.
Map Projected Basemap Reduced Data Records (BDRs)	Map-projected I/F, I/F corrected to i = 30º, e = 0º, and relevant DDR layers (NAC or WAC filter 7). CODMAC level 5.
(8-color) Map Projected Multispectral Reduced Data Records (MDRs)	Map-projected I/F, I/F corrected to i = 30º, e = 0º, and relevant DDR layers (WAC filters 1, 3-12). CODMAC level 5.
(3-color) Map Projected Multispectral Reduced Data Records (MD3s)	Map-projected I/F, I/F corrected to i = 30º, e = 0º, and relevant DDR layers (WAC filters 6, 7, and 9). CODMAC level 5.
(5-Color) Map Projected Multispectral Reduced Data Records (MP5s)	Map-projected I/F, I/F corrected to i = 30º, e = 0º, and relevant DDR layers (WAC filters 4, 6, 7, 9, and 12). CODMAC level 5.
Map Projected High-incidence Angle Basemap Illuminated from the East Reduced Data Records (HIEs)	Map-projected I/F, I/F corrected to i = 30º, e = 0º, and relevant DDR layers (NAC or WAC filter 7). CODMAC level 5.
Map Projected High-incidence Angle Basemap Illuminated from the West Reduced Data Records (HIWs)	Map-projected I/F, I/F corrected to i = 30º, e = 0º, and relevant DDR layers (NAC or WAC filter 7). CODMAC level 5.
Map Projected Low-incidence Angle Basemap Reduced Data Records (LOIs)	Map-projected I/F, I/F corrected to i = 30º, e = 0º, and relevant DDR layers (NAC or WAC filter 7). CODMAC level 5.
Map Projected Regional Targeted Mosaic Reduced Data Records (RTMs)	Map-projected I/F, I/F corrected to i = 30º, e = 0º, and relevant DDR layers (NAC or WAC filters 1, 3-12). CODMAC level 5.
Standard data product	A data product defined during the proposal and selection process and that is contractually promised by the PI as part of the investigation. Standard data products are generated in a predefined way, using well-understood procedures, and processed in “pipeline” fashion.

APPENDIX B. LABEL AND HEADER DESCRIPTIONS

The keywords listed below appear in the example labels found in Appendices C – L.

PDS_VERSION_ID
The version number of the PDS standards document that is valid when a data product label is created. PDS3 is used for the MESSENGER Data products.

File format parameters

RECORD_TYPE
The record format of a file.

RECORD_BYTES
The number of bytes in a physical file record, including record terminators and separators.

FILE_RECORDS
The number of physical file records, including both label records and data records.

LABEL_REVISION_NOTE
Provides information regarding the revision status and authorship of a PDS label.

^IMAGE
The pointer to a full image object. This object contains all the sub-frames which correspond to a given observation. The sub-frames are arrayed in their respective positions corresponding to a full frame observation. The value contains the starting record position in the file.

General data description parameters

MISSION_NAME
Identifies the MESSENGER planetary mission.

INSTRUMENT_HOST_NAME
The full, unabbreviated name of the spacecraft.

DATA_SET_ID
Uniquely identifies the data sets available on the volume.

DATA_QUALITY_ID
A data quality index is used to encode figures-of-merit into one parameter that is included in the label of each CDR or DDR. The 16-byte data quality index is interpreted as follows:

```
Byte 0: Image source is CCD.
            1 = Image source is test pattern as indicated by
                  MESS:SOURCE=1=Test pattern or
                  MESS:SOURCE=2=Inverted test pattern.
```

0 = Image source is CCD as indicated by MESS:SOURCE=0=CCD.

Byte 1: Valid exposure time.

1 = Exposure time in ms as indicated by MESS:EXPOSURE equals 0 ms (during cruise) or is less than or equal to 2 ms (orbit).

0 = Exposure time in ms as indicated by MESS:EXPOSURE is greater than or equal to minimum valid value.

Byte 2: Presence of an excessive number of pixels at or approaching saturation.

As saturation is approached responsivity decreases, and signal becomes nonlinear with brightness for small sources. Saturation can be exceeded for very bright or large sources once pixel antiblooming is overwhelmed. The raw 12-bit DN level indicative of the onset of saturation varies between the two CCDs. In the WAC (MESS:IMAGER=0) it is approximately 3600; in the NAC (MESS:IMAGER=1) it is approximately 3400. If a LUT has been used to convert 12-bit to 8-bit DN, then an 8-bit DN value of 255 also indicates saturation. An 8-bit 255 is encountered before saturation of the 12-bit DN in the case of LUT 1. In autoexposure mode, the typical threshold for the allowable number of saturated pixels is 5 pixels. In manual exposure mode the number of saturated pixels is uncontrolled.

1 = There are > 5 pixels exceeding the DN indicating onset of saturation.

0 = There are < 5 pixels exceeding the DN indicating onset of saturation.

Byte 3: Valid pivot position.

1 = Pivot position not valid, as indicated by pivot position validity flag MESS:PIV_PV=0=invalid

0 = Pivot position valid as indicated by both keywords having a value of 1=valid.

Byte 4: Filter wheel in position (WAC only; requires MESS:IMAGER=0, or else value of this byte = 0).

1 = Filter wheel not in position, as indicated by any of three conditions:

(a) filter wheel position validity flag MESS:FW_PV=0=invalid,

(b) filter wheel reading validity flag MESS:FW_RV=0=invalid, or

(c) an excessive difference between filter wheel resolver goal and actual position as given in table below.

0 = Filter wheel in position as indicated by an allowable difference between goal and position, and by both MESS:FW_PV=1 and MESS:FW_RV=1 (See Table B-1).

Table B-1: Filter wheel encoder positions

FILTER_NUMBER	MESS:FW_GOAL	Allowable (abs(MESS:FW_POS - MESS:FW_GOAL))
1	17376	+/- 500
2	11976	+/- 500
3	6492	+/- 500
4	1108	+/- 500
5	61104	+/- 500
6	55684	+/- 500
7	50148	+/- 500
8	44760	+/- 500
9	39256	+/- 500
10	33796	+/- 500
11	28252	+/- 500
12	22852	+/- 500

Byte 5: Quality of spacecraft attitude knowledge.
1 = Spacecraft attitude knowledge is bad (MESS:ATT_FLAG is in the range 0-3).
0 = Spacecraft attitude knowledge is good (MESS:ATT_FLAG is in the range 5-7).

Byte 6: CCD temperature range.
1 = CCD out of temperature range at which performance is well calibrated (MESS:CCD_TEMP is outside a range of between 1005 and 1130, which for the WAC is -45C to -11 C, and for the NAC is -48C to -14C).
0 = CCD within well calibrated temperature range (MESS:CCD_TEMP is within the stated range).

Byte 7: Completeness of data within the commanded selection of subframes or full frame.
Missing frames or portions of frames are indicated in an EDR with a value of 0 (this cannot be a valid data value).
1 = There are missing data (some pixels populated with 0).
0 = There are no missing data.

Bytes 8-15: spare.

PRODUCT_ID
The permanent, unique identifier assigned to a data product by its producer. In the PDS, the value assigned to product_id must be unique within its data set.

PRODUCT_TYPE
Identifies the type or category of a product within the data set.

PRODUCT_VERSION_ID
Identifies the version of an individual product within the data set.

SOURCE_PRODUCT_ID
This is a set of input files used as input to create this product. The first element is the original spacecraft solid state recorder (SSR) filename as downlinked. Additional elements are the SPICE kernels used to produce the ancillary data.

PRODUCER_INSTITUTION_NAME
The organization responsible for developing the data products.

SOFTWARE_NAME
The name of the software system that created the data products. The version number of the software is identified by the SOFTWARE_VERSION_ID keyword.

SOFTWARE_VERSION_ID
Version of the software used to generate the data products.

MISSION_PHASE_NAME
Provides the commonly-used identifiers of the MESSENGER Mission Phase. These are (From MESSENGER Data Management and Archiving Plan [Applicable Document 4]):

```
EARTH CRUISE
EARTH FLYBY
VENUS 1 CRUISE
VENUS 1 FLYBY
VENUS 2 CRUISE
VENUS 2 FLYBY
MERCURY 1 CRUISE
MERCURY 1 FLYBY
MERCURY 2 CRUISE
MERCURY 2 FLYBY
MERCURY 3 CRUISE
MERCURY 3 FLYBY
MERCURY 4 CRUISE
MERCURY ORBIT
MERCURY ORBIT YEAR 2
MERCURY ORBIT YEAR 3
MERCURY ORBIT YEAR 4
MERCURY ORBIT YEAR 5
```

TARGET_NAME
Identifies the target. (Such as: MERCURY, VENUS, EARTH, MOON, OTHER).

SEQUENCE_NAME
Identifies the imaging sequence name.

OBSERVATION_ID
Image counter from header.

OBSERVATION_TYPE
The imaging campaign of which the image is a part. This can be one or more of the following values:

- Monochrome (either a NAC image or a WAC 750-nm filter image, targeted or part of global mapping during the primary mission, with a goal of near-nadir pointing and solar incidence angle near 68 degrees)

- Color (always WAC images, 3- or 8-color targeted, or part of global 8-color mapping during the primary mission with a goal of near-nadir pointing and low solar incidence angle)
- Stereo (either a NAC image or a WAC 750-nm filter image, targeted or part of global mapping during the primary mission as the stereo complement to the global monochrome map, or part of global mapping during the extended mission as the stereo complement to the albedo map)
- Limb (always a WAC 750-nm filter image, taken in groups from high orbit)
- Northern Polar (a WAC 750-nm filter image taken as part of a recurrent series to map permanent shadow near the north pole)
- Southern Polar (a WAC 750-nm filter image 1st solar day in orbit, or a NAC image 2nd solar day, taken as part of a recurrent series to map permanent shadow near the south pole)
- Optical Navigation (TBD)
- Pivot Calibration (WAC clear filter star images taken weekly near apoapsis in at least 3 pivot positions, to track long-term drift in pointing due to thermally-driven plastic deformation of spacecraft between MDIS base and star cameras)
- Dark Current (NAC or WAC 430-nm filter images taken with MDIS stowed)
- Thermal Calibration (WAC clear filter star images taken every several months over one orbit, in groups with multiple pivot positions, to track thermally-driven elastic deformation of the spacecraft between the MDIS base and star cameras)
- Engineering (TBD special tests)
- Targeted (NAC high resolution or stereo, NAC images that ride along with MASCS or MLA targets, WAC unbinnned 3-color, or WAC 8-color photometric measurements)
- Albedo (either a NAC image or a WAC 750-nm filter image, targeted or part of global mapping during the extended mission, with a goal of near-nadir pointing and low solar incidence angle)
- High Incidence (either a NAC image or a WAC 750-nm filter image, part of global mapping during the extended mission with a goal of near-nadir pointing and solar incidence angle near 80 degrees)
- Three Color (part of global 3-color mapping in the extended mission with a goal of near-nadir pointing and low solar incidence angle, with less pixel binning and thus higher spatial resolution than the 8-color map)
- Ridealong NAC (NAC image taken at low altitude as part of untargeted high resolution coverage)
- Satellite Search (WAC clear filter image of part of Mercury's gravitational sphere of influence, taken as part of a search for satellites)
- Vulcanoid Search (WAC clear filter image of space near the ecliptic plane interior to Mercury's orbit, taken as part of a search for vulcanoid asteroids)
- Dark Polar Craters (NAC or clear filter WAC images near or including permanently shadowed polar regions, taken as part of a search for features illuminated indirectly by sunlight crater walls)

SITE_ID
The integer ID number of a region of interest observed by a targeted observation, from the MESSENGER targeting database.

SITE_NAME
The name assigned to a targeted site.

RATIONALE_DESC
Describes the target site and the objectives of the measurement.

Time parameters

START_TIME
The UTC date and time for the start of the exposure.

STOP_TIME
The UTC date and time for the end of the exposure.

SPACECRAFT_CLOCK_START_COUNT
Clock count of the spacecraft computer at the start of the exposure. For MESSENGER, this is also known as the Mission Elapsed Time (MET). MESSENGER has a two stage clock. The clock partition is added to the beginning of the two stages. The three parts of this value are formatted as follows:

- P/SSSSSSSSSS:TTTTTT
  - P = SPICE clock partition
  - S = first stage, spacecraft clock seconds
  - T = second stage, spacecraft clock microseconds

SPACECRAFT_CLOCK_STOP_COUNT
Clock count of the spacecraft computer at the end of the exposure. For MESSENGER, this is also known as the Mission Elapsed Time (MET). See **SPACECRAFT_CLOCK_START_COUNT** for format.

ORBIT_NUMBER
This is based on the Mission Design table of time vs orbit number, starting with orbit #1 at 2011-03-18 06:50:12.000. The value increments at each apoapsis.

PRODUCT_CREATION_TIME
The time in UTC when the data product was created.

Instrument engineering parameters

INSTRUMENT_NAME
The FULL name of the instrument. Note that the associated INSTRUMENT_ID element provides an abbreviated name or acronym for the instrument, which includes the camera that was being used.

INSTRUMENT_ID
Abbreviated name or acronym which identifies the instrument. In this case it is either MDIS-WAC or MDIS-NAC (for the WIDE ANGLE CAMERA or NARROW ANGLE CAMERA).

FILTER_NAME
Filter names are descriptive names of the filter used for the WAC camera. The NAC has no filter wheel so it is “N/A” for the NAC.

FILTER_NUMBER

Provides the number of the WAC filter wheel through which an image or measurement was acquired. The NAC has no filter wheel so it is “N/A” for the NAC.

CENTER_FILTER_WAVELENGTH
The mid point wavelength value between the minimum and maximum instrument filter wavelength values. A table showing the relationship between filter number, center wavelength, and bandwidth can be found in section 2.1.6, Filters. The NAC has no filter wheel so it is "N/A" for the NAC.

BANDWIDTH
A measure of the spectral width of a filter (nanometers). For a root-mean-square detector this is the effective bandwidth of the filter i.e., the full width of an ideal square filter having a flat response over the bandwidth and zero response elsewhere. The NAC has no filter wheel so it is “N/A” for the NAC.

EXPOSURE_DURATION
The exposure duration (integration time) of the image observation expressed in milliseconds.

EXPOSURE_TYPE
The MDIS exposure setting. There are two settings – "AUTO" is the automatic exposure setting, and "MANUAL" is a manually commanded exposure setting.

DETECTOR_TEMPERATURE
Temperature of the CCD in degrees Celsius at the time the observation was made. The conversion formula depends on the camera performing the observation:

For WAC:

Temperature = -318.4553 + Raw * 0.2718

For NAC:

Temperature = -323.3669 + Raw * 0.2737

Where Raw is the raw counts in telemetry (MESS:CCD_TEMP).

FOCAL_PLANE_TEMPERATURE
The element indicates the temperature of the focal plane array in degrees Celsius at observation time. The conversion formula depends on the camera performing the observation:

For WAC:

Temperature = -263.2584 + Raw * 0.5022

For NAC:

Temperature = -268.8441 + Raw * 0.5130

Where Raw is the raw counts in telemetry (MESS:CAM_T1).

FILTER_TEMPERATURE
The temperature of the filter wheel. A single telemetry point is used to return the Filter Wheel or the Telescope temperature, depending on which camera is in use. Thus, this parameter is "N/A" if the NAC was used for the

observation because the telemetry point will be a measurement of the NAC telescope temperature. The conversion from Raw counts to degrees Celsius is:

Temperature = -292.7603 + Raw * 0.5553

Where Raw is the raw counts in telemetry (MESS:CAM_T2).

OPTICS_TEMPERATURE
The temperature of the NAC telescope. A single telemetry point is used to return the Filter Wheel or the Telescope temperature, depending on which camera is in use. Thus this parameter is "N/A" if the WAC was used for observation because the telemetry point will be a measurement of the WAC filter wheel temperature. The conversion from Raw counts to degrees Celsius is:

Temperature = -269.7180 + Raw * 0.4861

Where Raw is the raw counts in telemetry (MESS:CAM_T2).

Geometry information

RIGHT_ASCENSION
The right ascension of the camera boresight. The values are specified relative to the J2000 inertial reference frame.

DECLINATION
The declination of the camera boresight. The values are specified relative to the J2000 inertial reference frame.

TWIST_ANGLE
The angle of rotation about an optical axis relative to celestial coordinates. It is defined as (180- CELESTIAL_NORTH_CLOCK_ANGLE) mod 360. Where CELESTIAL_NORTH_CLOCK_ANGLE is the direction of celestial north at the center of an image. It is measured from the 'upward' direction, clockwise to the direction toward celestial north (declination = +90 degrees), when the image is displayed left to right and top to bottom. The epoch of the celestial coordinate system is J2000.

RA_DEC_REF_PIXEL
Specifies the reference pixel to which the right_ascension and declination apply.

RETICLE_POINT_RA
The right ascension of the principle points of the camera.
Note: For MESSENGER the principle points are defined as the upper left pixel of the camera (line 1, sample 1), the upper right pixel (line 1, last sample), lower left (last line, sample 1), and lower right (last line, last sample).

RETICLE_POINT_DECLINATION
The declination of the principle points of the camera. For MESSENGER the principle points are defined as in RETICLE_POINT_RA.

Target parameters

SC_TARGET_POSITION_VECTOR
X, Y, Z components of the position vector from observer to target center expressed in J2000 coordinates, and corrected for light time and stellar aberration, evaluated at epoch at which the image was taken. Units are expressed in kilometers.

TARGET_CENTER_DISTANCE
Distance between the spacecraft and the center of the named target in kilometers.

Target within sensor field of view parameters

NOTE: Any value computed below which requires the shape of Mercury (ellipsoid radii) as an input, will use values dictated by the science team, and updated during the course of the mission. A MESSENGER SPICE PCK kernel will be used to define any updated Mercury constants.

SLANT_DISTANCE
Distance from spacecraft to the camera boresight intercept point on the surface in kilometers.

CENTER_LATITUDE
CENTER_LONGITUDE
Latitude and longitude at the center of the full image frame.

HORIZONTAL_PIXEL_SCALE
The horizontal picture scale.

VERTICAL_PIXEL_SCALE
The vertical picture scale.

SMEAR_MAGNITUDE
Norm of velocity vector of camera boresight intercept point projected on the target, multiplied by the exposure duration with the scale of the image factored to obtain the smear in pixels. Spacecraft rotation is taken into account. (Units are in pixels.)

SMEAR_AZIMUTH
Azimuth of smear velocity vector. The reference line for the angle extends from the center of the image to the right edge of the image. The angle increases in the clock-wise direction. The angle is measured to the "image" of the smear velocity vector in the camera's focal plane. This image is computed by orthogonal projection of the smear vector onto the image plane and then applying transformations to orient the result properly with respect to the image. The specific transformations to be performed are given by the camera's I-kernel.

NORTH_AZIMUTH
Analogous to smear azimuth, but applies to the target north pole direction vector.

RETICLE_POINT_LATITUDE
RETICLE_POINT_LONGITUDE

Latitudes and longitudes of the surface intercept points of the principle points of the camera. (see RETICLE_POINT_RA for definition of the reticule points for MESSENGER. The units are expressed in degrees.

Spacecraft position with respect to central body

SUB_SPACECRAFT_LATITUDE
SUB_SPACECRAFT_LONGITUDE
Planetocentric latitude and longitude of spacecraft-to-body-center surface intercept vector. These parameters and the SPACECRAFT_ALTITUDE, SUB_SPACECRAFT_AZIMUTH parameters described below are relative to the central body for which the spacecraft is orbiting and not the target of the observation.

SPACECRAFT_ALTITUDE
Altitude of the spacecraft above a reference ellipsoid. Distance is measured to closest point on ellipsoid.

SUB_SPACECRAFT_AZIMUTH
Azimuth angle of sub-spacecraft point in image. Method of measurement is the same as for SMEAR_AZIMUTH.

Spacecraft Location

SPACECRAFT_SOLAR_DISTANCE
Analogous to TARGET_CENTER_DISTANCE but Sun replaces target body in computation.

SC_SUN_POSITION_VECTOR
X ,Y ,Z components of the position vector from observer to sun, center expressed in J2000 coordinates and corrected for light time and stellar aberration, evaluated at epoch at which image was taken. Units are kilometers.

SC_SUN_VELOCITY_VECTOR
x-, y-, and z- components of velocity vector of sun relative to the observer, expressed in J2000 coordinates, and corrected for light time, evaluated at epoch at which image was taken. Units are kilometers per second.

Viewing and lighting geometry

SOLAR_DISTANCE
Distance from target body center to Sun. The Sun position used is that described above.

SUB_SOLAR_AZIMUTH
Azimuth of the apparent sub-solar point, as seen by the spacecraft. This point is the surface intercept of the target-center-to-Sun vector, evaluated at the camera epoch minus one-way light time from target to spacecraft at that epoch spacecraft at that epoch. Azimuth is measured as described above. Target body position relative to the spacecraft is corrected for light-time and stellar aberration. Target body orientation is corrected for light-time.

SUB_SOLAR_LATITUDE
SUB_SOLAR_LONGITUDE
Planetocentric latitude and longitude of the apparent sub-solar point.

INCIDENCE_ANGLE
Provides a measure of the lighting condition at the intercept point. Incidence angle is the angle between the local vertical at the intercept point (surface) and a vector from the intercept point to the sun. The incidence_angle varies from 0 degrees when the intercept point coincides with the sub_solar point to 90 degrees when the intercept point is at the terminator (i.e., in the shadowed or dark portion of the target body). Thus, higher values of incidence_angle indicate the existence of a greater number of surface shadows.

PHASE_ANGLE
Provides a measure of the relationship between the instrument viewing position and incident illumination (such as solar light). Phase_angle is measured at the target; it is the angle between a vector to the illumination source and a vector to the instrument. If not specified, the target is assumed to be at the center of the instrument field of view. If illumination is from behind the instrument, phase_angle will be small.

EMISSION_ANGLE
Provides the value of the angle between the surface normal vector at the intercept point and a vector from the intercept point to the spacecraft. The emission_angle varies from 0 degrees when the spacecraft is viewing the subspacecraft point (nadir viewing) to 90 degrees when the intercept is tangent to the surface of the target body. Thus, higher values of emission_angle indicate more oblique viewing of the target.

LOCAL_HOUR_ANGLE
Angle from the negative of the target-body-to-Sun vector to the projection of the negative of the spacecraft-to-target vector onto the target's instantaneous orbital plane. Both vectors are computed as in the sub-spacecraft point computation. The angle is measured in a counterclockwise direction when viewed from North of the ecliptic plane.

IMAGE Object

LINES
Total number of data instances along the vertical axis of an image.
Note: In PDS label convention; the number of lines is stored in a 32-bit integer field. The minimum value of 0 indicates no data received. For compressed images this value represents the total number of data instances along the vertical axis once the image has been uncompressed.

LINE_SAMPLES
Total number of data instances along the horizontal axis of an image. For compressed images the keyword value is the total number of data instances along the horizontal axis once the image has been uncompressed.

BANDS
The number of bands in the image.

BAND_STORAGE_TYPE
The storage sequence of lines, samples, and bands in the image. The values describe, for example, how different samples are interleaved in image lines, or how samples from different bands are arranged sequentially.

OFFSET
A shift or displacement of a data value where
true value = offset + (scaling factor x stored value).
In MDIS CDRs and RDRs the offset value is zero.

SCALING_FACTOR
A constant value by which the stored value is multiplied to recover a true value, after subtraction of an offset. In MDIS CDRs and RDRs the scaling factor is unity.

SAMPLE_BITS
Stored number of bits, or units of binary information, contained in a line_sample value.

SAMPLE_BIT_MASK
The active bits in a sample. For a 32-bit sample where all bits are active the sample_bit_mask would be 2#11111111111111111111111111111111#.

SAMPLE_TYPE
Data storage representation of the sample value.

CORE_NULL
A special value whose presence indicates missing data. In MDIS images this value is used in whole images reconstructed from multiple subframes, for pixel locations outside the downlinked subframes.

CORE_LOW_REPR_SATURATION
A special value whose presence indicates the true value cannot be represented in the chosen data type and length -- in this case being below the allowable range -- which may happen during conversion from another data type. It is not expected that this value can occur in MDIS CDRs or RDRs.

CORE_LOW_INSTR_SATURATION
A special value whose presence indicates saturation at the low end, that is, failure of an image pixel to exceed a low-end meaningful value in raw data. In MDIS CDRs or RDRs this would correspond to data originating from a pixel that in an EDR has an 8-bit or 12-bit value of zero. (This is unexpected but possible; the detector bias is set to minimize chances of a zero 12-bit value, and 12-to-8-bit look-up tables are designed to avoid conversion of a non-zero 12-bit value to an 8-bit zero.)

CORE_HIGH_REPR_SATURATION
A special value whose presence indicates the true value cannot be represented in the chosen data type and length -- in this case being above the allowable range -- which may happen during conversion from another data type. It is not expected that this value can occur in MDIS CDRs or RDRs.

CORE_HIGH_INSTR_SATURATION
A special value whose presence indicates saturation at the high end, that is, an image pixel encoding a value above the range of linear CCD response to light. This value occurs at about 0.9 of pixel full well. In MDIS CDRs or

RDRs this would correspond to data originating from a pixel that in an EDR exceeds the equivalent of a 12-bit threshold value. In the WAC (MESS:IMAGER=0) the 12-bit DN value where saturation occurs is approximately 3600; in the NAC (MESS:IMAGER=1) it is approximately 3400.

UNIT
The unit element provides the full name or standard abbreviation of a unit of measurement in which a value is expressed.

DARK_STRIP_MEAN
The mean value in the CCD dark strip. This is a measure of the dark current even if the rest of the CCD is illuminated

BAND_NAME
The name given to a single band in a multi-band image or image qube.

PHOTOMETRIC_CORRECTION_TYPE
Indicated the type of photometric correction applied to the data.

USAGE_NOTE
Provides information about the use of a particular data element or object.

Image statistics

MINIMUM
The lowest value within the exposed area of the CCD.

MAXIMUM
The highest value within the exposed area of the CCD.

MEAN
The arithmetic mean value within the exposed area of the CCD.

STANDARD_DEVIATION
The standard deviation of the values within the exposed area of the CCD.

Number of pixels having values that cannot be calibrated

SATURATED_PIXEL_COUNT
The number of pixels whose values indicate that the corresponding detector elements exceeded their linear response range. In the WAC (MESS:IMAGER=0) the 12-bit DN value where saturation occurs is approximately 3600; in the NAC (MESS:IMAGER=1) it is approximately 3400.

IMAGE Map Projection Object

^DATA_SET_MAP PROJECTION
Pointer to the map projection catalog object.

MAP_PROJECTION_TYPE
Identifies the type of projection characteristic of a given map.

A_AXIS_RADIUS

Provides the value of the semimajor axis of the ellipsoid that defines the approximate shape of a target body. 'A' is usually in the equatorial plane.

B_AXIS_RADIUS
Provides the value of the intermediate axis of the ellipsoid that defines the approximate shape of a target body. 'B' is usually in the equatorial plane.

C_AXIS_RADIUS
Provides the value of the semiminor axis of the ellipsoid that defines the approximate shape of a target body. 'C' is normal to the plane defined by 'A' and 'B'.

FIRST_STANDARD_PARALLEL
Valid only for Conic projections.

SECOND_STANDARD_PARALLEL
Valid only for Conic projections.

POSITIVE_LONGITUDE_DIRECTION
Identifies the direction of longitude (e.g. EAST, WEST) for a planet.

CENTER_LATITUDE
Provides a reference latitude for certain map projections. The map_scale (or map_resolution) is typically defined at the center_latitude and center_longitude.

CENTER_LONGITUDE
Provides a reference longitude for certain map projections. The map_scale (or map_resolution) is typically defined at the center_latitude and center_longitude.

REFERENCE_LATITUDE
Provides the new zero latitude in a rotated spherical coordinate system that was used in a given map_projection_type.

REFERENCE_LONGITUDE
Defines the zero longitude in a rotated spherical coordinate system that was used in a given map_projection_type.

LINE_FIRST_PIXEL
Provides the line index for the first pixel that was physically recorded at the beginning of the image array.

LINE_LAST_PIXEL
Provides the line index for the last pixel that was physically recorded at the end of the image array.

SAMPLE_FIRST_PIXEL
Provides the sample index for the first pixel that was physically recorded at the beginning of the image array.

SAMPLE_LAST_PIXEL
Provides the sample index for the last pixel that was physically recorded at the end of the image array.

MAP_PROJECTION_ROTATION

Provides the clockwise rotation, in degrees, of the line and sample coordinates with respect to the map projection origin. This parameter is used to indicate where 'up' is in the projection.

MAP_RESOLUTION
Identifies the scale of a given map.

MAP_SCALE
Identifies the scale of a given map.

MAXIMUM_LATITUDE
Specifies the northernmost latitude of a spatial area.

MINIMUM_LATITUDE
Specifies the southernmost latitude of a spatial area.

WESTERNMOST_LONGITUDE
For Planetocentric coordinates and for Planetographic coordinates in which longitude increases toward the east, the westernmost (leftmost) longitude of a spatial area is the minimum numerical value of longitude unless it crosses the Prime Meridian.

EASTERNMOST_LONGITUDE
For Planetocentric coordinates and for Planetographic coordinates in which longitude increases toward the east, the easternmost (rightmost) longitude of a spatial area is the maximum numerical value of longitude unless it crosses the Prime Meridian.

LINE_PROJECTION_OFFSET
Provides the line offset value of the map projection origin position from the line and sample 1,1 (line and sample 1,1 is considered the upper left corner of the digital array). Note: that the positive direction is to the right and down.

SAMPLE_PROJECTION_OFFSET
Provides the sample offset value of the map projection origin position from line and sample 1,1 (line and sample 1,1 is considered the upper left corner of the digital array). Note: that the positive direction is to the right and down.

COORDINATE_SYSTEM_TYPE
There are three basic types of coordinate systems: body-fixed rotating, body-fixed non-rotating and inertial. A body-fixed coordinate system is one associated with a body (e.g., planetary body or satellite). In contrast to inertial coordinate systems, a body-fixed coordinate system is centered on the body and rotates with the body (unless it is a non-rotating type). For the inertial coordinate system type, the coordinate system is fixed at some point in space.

COORDINATE_SYSTEM_NAME
Provides the full name of the coordinate system to which the state vectors are referenced.

MDIS INSTRUMENT RAW PARAMETERS

MESS:MET_EXP
The mission-elapsed-time, or MET, in seconds since MESSENGER launch of the second during which an MDIS image completes its exposure. Note: the spacecraft clock was reset in early 2013. Use of clock partitions with MET values disambiguates those values after the reset.

MESS:IMG_ID_LSB
The 16 least-significant-bits of the 24-bit unique image identifier from the raw image header. This item is not available prior to an instrument software upload 2009-08-18 and will be set to N/A in images taken prior to that time.

MESS:IMG_ID_MSB
The 8 most-significant-bits of the 24-bit unique image identifier from the raw image header. This item is not available prior to an instrument software upload 2009-08-18 and will be set to N/A in images taken prior to that time.

MESS:ATT_CLOCK_COUNT
The mission-elapsed-time, or MET, in seconds since MESSENGER launch, of the second during which the spacecraft attitude measurement in the header of an MDIS image was acquired. Note: the spacecraft clock was reset in early 2013. Use of clock partitions with MET values disambiguates those values after the reset.

MESS:ATT_Q1
The roll value of the vector component of the attitude quaternion representing spacecraft attitude, in the header of an MDIS image.

MESS:ATT_Q2
The pitch value of the vector component of the attitude quaternion representing spacecraft attitude, in the header of an MDIS image.

MESS:ATT_Q3
The yaw value of the vector component of the attitude quaternion representing spacecraft attitude, in the header of an MDIS image.

MESS:ATT_Q4
The scalar component of the attitude quaternion representing spacecraft attitude, in the header of an MDIS image.

MESS:ATT_FLAG
Attitude quality flag for the spacecraft attitude quaternion in the header of an MDIS image:

7 = Attitude Knowledge OK (At least 1 Star Tracker is available and at least 50% of gyro data is valid)

6 = Attitude Knowledge OK (No Star Tracker is available but at least 50% of gyro data is valid)

5 = Attitude Knowledge OK (No Star Tracker is and between 10% and 50% of gyro data is valid -OR- At least 1 Star Tracker is valid and between 0% and 50% of gyro data valid)

4 = not a legal option
3 = Attitude Knowledge BAD (At least 1 Star Tracker is available and at least 50% of gyro data is valid)

2 = Attitude Knowledge BAD (No Star Tracker is available but at least 50% of gyro data is valid)

1 = Attitude Knowledge BAD (No Star Tracker is available and between 10% and 50% of gyro data is valid -OR- At least 1 Star Tracker is valid and between 0% and 50% of gyro data is valid)

0 = Attitude Knowledge BAD (No Star Tracker data fewer than 10% of gyro data valid).

MESS:PIV_POS_MOTOR
The actual position of the MDIS pivot during exposure of an MDIS image, in 150-microradian motor step units. This item is not available prior to 2009-08-18 and will be set to N/A.

MESS:PIV_GOAL
The commanded position of the MDIS pivot during exposure of an MDIS image, in increments of (180 DEGREES / (2**15)) with zero at nadir. -180 degrees is stowed. This item is not available after 2009-08-18 and will be set to N/A.

MESS:PIV_POS
The position of the MDIS pivot during exposure of an MDIS image, determined by counting steps of the pivot stepper motor, in increments of (360 DEGREES/(2**16)) with zero at nadir. -180 degrees is stowed.

MESS:PIV_READ
The position of the MDIS pivot during exposure of an MDIS image, determined from raw output of the pivot position resolver, in increments of (45 DEGREES / (2**16)). The resolver covers 45 degrees of motion; the resolver read-out values repeat eight times over the entire 360 degrees that an unconstrained platform could travel.

MESS:PIV_CAL
The offset in measured pivot position applied to MESS:PIV_POS and MESS:PIV_GOAL so that zero is as close as possible to true spacecraft nadir (+z axis). The correction is in increments of (180 DEGREES / (2**15)).

MESS:FW_GOAL
The goal position, in raw counts of the position resolver on the MDIS filter wheel. For each commanded filter number, the instrument software will try to place the filter wheel at the positions listed in Table B-1. Actual position attained is reported in MESS:FW_POS.

MESS:FW_POS
The actual position, in raw counts of the position resolver on the MDIS filter wheel. For each commanded filter number, the instrument software will try to place the filter wheel at the positions listed in Table B-1. Commanded position is reported in MESS:FW_GOAL. There is a tolerance of 500 resolver counts around MESS:FW_GOAL for MESS:FW_POS to indicate that the filter wheel is correctly positioned.

MESS:FW_READ
The raw value from the MDIS filter wheel resolver in resolver counts. It is used by the flight software to compute MESS:FW_POS. For each commanded filter number, the instrument software will try to place the filter wheel at the

positions listed in Table B-1. Commanded position is reported in MESS:FW_GOAL. There is a tolerance of 500 resolver counts around MESS:FW_GOAL for MESS:FW_POS to indicate that the filter wheel is correctly positioned.

MESS:CCD_TEMP
MDIS CCD temperature in raw counts. The conversion formula to degrees Celsius depends on the camera performing the observation:

For WAC:
Temperature = -318.4553 + Raw * 0.2718

For NAC:
Temperature = -323.3669 + Raw * 0.2737

Where Raw is the raw counts in telemetry (MESS:CCD_TEMP).

MESS:CAM_T1
The temperature of the focal plane array in raw counts at observation time. The conversion formula to degrees Celsius depends on the camera performing the observation:

For WAC:
Temperature = -263.2584 + Raw * 0.5022

For NAC:
Temperature = -268.8441 + Raw * 0.5130

Where Raw is the raw counts in telemetry (MESS:CAM_T1).

MESS:CAM_T2
Camera temperature 2 in raw counts. The meaning depends on whether it is being reported by the WAC or NAC. A single telemetry point is used to return the raw value of filter wheel temperature (WAC), FILTER_TEMPERATURE once converted to units of degrees Celsius, or the raw value of telescope temperature (NAC), OPTICS_TEMPERATURE once converted to units of degrees Celsius, depending on which camera is in use.

For the WAC, this is temperature of the filter wheel. Thus, FILTER_TEMPERATURE is "N/A" if the NAC was used for the observation because the telemetry point will be a measurement of the NAC telescope temperature. For the WAC the conversion from raw counts to degrees

Celsius is:

T = -292.7603 + Raw * 0.5553

where Raw is the raw counts in MESS:CAM_T2.

For the NAC, this is temperature of the NAC telescope. Thus OPTICS_TEMPERATURE is "N/A" if the WAC was used for observation because the telemetry point will be a measurement of the WAC filter wheel temperature.

For the NAC the conversion from raw counts to degrees Celsius is:

T = -269.7180 + Raw * 0.4861

where Raw is the raw counts in telemetry (MESS:CAM_T2).

MESS:EXPOSURE
MDIS exposure time in milliseconds.

MESS:DPU_ID
The identified of the DPU used during acquisition of an MDIS image:

0 = DPU-A
1 = DPU-B.

MESS:IMAGER
Which of the two cameras was used during acquisition of an MDIS image:

0 = WAC
1 = NAC.

MESS:SOURCE
Source of an MDIS image, either a scene image from the CCD or one of two test patterns:

0 = CCD
1 = Test pattern
2 = Inverted test pattern.

MESS:FPU_BIN
On-chip image binning option for MDIS. Images may be taken either without on-chip binning or with 2x2 binning, which decreases the size of a full image from 1024x1024 pixels to 512x512 pixels. On-chip binning can be used to manage the size of raw images being stored on the spacecraft solid-state recorder, or to increase CCD sensitivity. If this option is used, sensitivity increases by about a factor of four but read noise is similar:

0 = 1x1 binning (none)
1 = 2x2 binning.

MESS:COMP12_8
12 to 8 bit image compression enabled or disabled. Which algorithm is used is specified by MESS:

0 = disabled (images are 12-bit)
1 = enabled (images are 8-bit).

MESS:COMP_ALG
12 to 8 bit compression algorithm (0-7) used to compress images from 12 to 8 bits. Whether this option is enabled is indicated by MESS:COMP12_8. The compression is implemented using one of eight lookup tables, which are optimized to the lower WAC CCD read noise and higher NAC read noise, light levels, and bias level (nominal or after inflight drift):

0 = Lo-noise hi-bias SNR proportional. Case: Either NAC or WAC, for nominal bias (all DNs greater than 12-bit 230). Formulation: Maps 12-bit DNs between bias and saturation into 8 bits, proportional to SNR. Information loss is spread evenly over dynamic range. Usage: Typical imaging with varied brightness.

1 = Lo-noise hi-bias DN-weighted SNR proportional. Case: Low-noise (WAC) CCD, bias nominal (all DNs greater than 12-bit 230). Formulation: Maps 12 bits

between bias and saturation into 8 bits proportional to sliding scale. Information is preferentially retained at the low DN end. Usage: Faint objects. Saturates at a DN of 3000.

2 = Hi-noise hi-bias DN-weighted SNR proportional. Case: High-noise (NAC) CCD, bias nominal (all DNs greater than 12-bit 230). Formulation: Maps 12 bits between bias and saturation into 8 bits proportional to sliding scale. Information is preferentially retained at the low DN end. Usage: B/W, mostly low brightness.

3 = Lo-noise med-bias SNR proportional. Case: Either CCD, assuming bias has dropped tens DN (all DNs greater than 12-bit 180). Formulation: Maps 12-bit DNs between bias and saturation into 8 bits, proportional to SNR. Information loss is spread over dynamic range. Usage: Typical imaging, varied brightness.

4 = Lo-noise med-bias DN-weighted SNR proportional. Case: Lo-noise (WAC) CCD, assuming bias has dropped tens DN (all DNs greater than 12-bit 180). Formulation: Maps 12 bits between bias and saturation into 8 bits proportional to sliding scale. Information retained at low DN end. Usage: Faint objects. Saturates at a DN of 3000.

5 = Hi-noise med-bias DN-weighted SNR proportional. Case: High-noise (NAC) CCD, assuming bias has dropped tens DN (all DNs greater than 12-bit 180). Formulation: Maps 12 bits between bias and saturation into 8 bits proportional to sliding scale. Information is retained preferentially at the low end of the DN range. Usage: B/W, mostly low brightness.

6 = Zero-bias SNR proportional. Case: Contingency; assuming bias decreased to near 0 from the nominal 230 12-bit DNs. Formulation: Maps 12-bit DNs between bias and saturation into 8 bits, proportional to SNR. Information loss is spread over the dynamic range. Usage: Typical imaging, varied brightness.

7 = Linear. Case: either CCD, bias or read noise. Formulation: Maps 12-bit DNs between the bias level and saturation linearly into 8-bit space. Usage: High brightness mapping; information loss greatest at low DNs, preserves information at high DNs.

MESS:COMP_FST
Status of lossless Fast compression of MDIS images. This is applied to images by the instrument itself. The images are first uncompressed on the solid-state recorder if lossy wavelet compression is applied:

0 = Fast disabled
1 = Fast enabled.

MESS:TIME_PLS
Source of the 1 Hz time pulse used in time-tagging MDIS images:

0 = Software
1 = Main Processor A (MP-A)
2 = Main Processor B (MP-B)
3 = Software.

MESS:LATCH_UP
Indicator if MDIS FPU is latched up. If the value is 1 then the image data are probably invalid.

0 = OK
1 = Latched.

MESS:EXP_MODE
Exposure time mode used for acquisition of an MDIS image. Manual exposure uses a pre-commanded exposure time. Autoexposure determines the exposure time from test images taken before the exposure, targeting a specific brightness value.

0 = Manual
1 = Automatic.

MESS:PIV_STAT
Pivot control state of MDIS.

A resolver provides a position reading of the pivot platform. The resolver only covers 45 degrees of motion; the resolver read-out values repeat eight times over the entire 360 degrees that an unconstrained platform could travel. The DPU software must determine in which of the eight octants the platform is located before the resolver reading is meaningful. The software combines the octant with the resolver reading to form a position that covers the entire 360 degrees.

To determine the octant the DPU software must be commanded to 'home' the platform. To home the pivot platform, the software drives the motor open loop backwards into the hard stop at -185 degrees. Then the software drives the motor forward, open loop, prepositioning it to -179 degrees. Until homing is completed, the pivot platform is considered 'lost' and all other pivot commands will remain pending.

This status item describes that state of the pivot in determining this position knowledge.

0 = Lost
1 = Searching
2 = Found
3 = OK.

MESS:PIV_MPEN
Status of main processor (MP) control of the MDIS pivot. If this is enabled, then the pivot goes to a position broadcast by the MP that points MDIS to nadir or some other aimpoint. If not enabled then a discrete pivot position is commanded.

0 = Disabled
1 = Enabled.

MESS:PIV_PV
Validity flag for position of the MDIS pivot given in MESS:PIV_POS.

0 = invalid
1 = valid.

MESS:PIV_RV
Validity flag for reading of the MDIS pivot given in MESS:PIV_READ.

0 = invalid
1 = valid.

MESS:FW_PV
Validity flag for position of the MDIS filter wheel given in MESS:FW_POS.

0 = invalid
1 = valid.

MESS:FW_RV
Validity flag for reading of the MDIS filter wheel given in MESS:FW_READ.

0 = invalid
1 = valid.

MESS:AEX_STAT
The bin in a DPU histogram of image brightness used for MDIS automatic exposure time calculation.

In a test image that it analyzed to determine an exposure time using automatic exposure, DPU hardware generates a histogram of the image. The histogram is analyzed by the software to determine if the image is overexposed or underexposed, and the exposure time is adjusted accordingly by analyzing the histogram of raw DN values in different brightness bins. The background or dark current level (MESS:AEX_BACB) is taken into account an is assumed to be a constant value.

A threshold of number of pixels (MESS:AEX_STHR) is allowed to exceed a target brightness (MESS:AEX_TGTB). Starting with the maximum value, the number of pixels exceeding the target is counted, and the brightness of the histogram bin in which that threshold is reached (MESS:AEX_STAT) is reported. The exposure time is scaled back by the ratio of MESS:AEX_TGTB/MESS:AEX_STAT.

MESS:AEX_STHR
The number of pixels allowed to exceed target brightness during an MDIS automatic exposure time calculation.

In a test image that it analyzed to determine an exposure time using automatic exposure, DPU hardware generates a histogram of the image. The histogram is analyzed by the software to determine if the image is overexposed or underexposed, and the exposure time is adjusted accordingly by analyzing the histogram of raw DN values in different brightness bins. The background or dark current level (MESS:AEX_BACB) is taken into account an is assumed to be a constant value.

A threshold of number of pixels (MESS:AEX_STHR) is allowed to exceed a target brightness (MESS:AEX_TGTB). Starting with the maximum value, the number of pixels exceeding the target is counted, and the brightness of the histogram bin in which that threshold is reached (MESS:AEX_STAT) is reported. The exposure time is scaled back by the ratio of MESS:AEX_TGTB/MESS:AEX_STAT.

MESS:AEX_TGTB
The target brightness used for MDIS automatic exposure time calculation.

In a test image that it analyzed to determine an exposure time using automatic exposure, DPU hardware generates a histogram of the image. The histogram is analyzed by the software to determine if the image is

overexposed or underexposed, and the exposure time is adjusted accordingly by analyzing the histogram of raw DN values in different brightness bins. The background or dark current level (MESS:AEX_BACB) is taken into account an is assumed to be a constant value.

A threshold of number of pixels (MESS:AEX_STHR) is allowed to exceed a target brightness (MESS:AEX_TGTB). Starting with the maximum value, the number of pixels exceeding the target is counted, and the brightness of the histogram bin in which that threshold is reached (MESS:AEX_STAT) is reported. The exposure time is scaled back by the ratio of MESS:AEX_TGTB/MESS:AEX_STAT.

MESS:AEX_BACB
The background brightness used for MDIS automatic exposure time calculation.

In a test image that it analyzed to determine an exposure time using automatic exposure, DPU hardware generates a histogram of the image. The histogram is analyzed by the software to determine if the image is overexposed or underexposed, and the exposure time is adjusted accordingly by analyzing the histogram of raw DN values in different brightness bins. The background or dark current level (MESS:AEX_BACB) is taken into account an is assumed to be a constant value.

A threshold of number of pixels (MESS:AEX_STHR) is allowed to exceed a target brightness (MESS:AEX_TGTB). Starting with the maximum value, the number of pixels exceeding the target is counted, and the brightness of the histogram bin in which that threshold is reached (MESS:AEX_STAT) is reported. The exposure time is scaled back by the ratio of MESS:AEX_TGTB/MESS:AEX_STAT.

MESS:AEX_MAXE
The maximum allowable exposure time from an MDIS automatic exposure time calculation.

In a test image that it analyzed to determine an exposure time using automatic exposure, DPU hardware generates a histogram of the image. The histogram is analyzed by the software to determine if the image is overexposed or underexposed, and the exposure time is adjusted accordingly by analyzing the histogram of raw DN values in different brightness bins. The background or dark current level (MESS:AEX_BACB) is taken into account an is assumed to be a constant value.

A threshold of number of pixels (MESS:AEX_STHR) is allowed to exceed a target brightness (MESS:AEX_TGTB). Starting with the maximum value, the number of pixels exceeding the target is counted, and the brightness of the histogram bin in which that threshold is reached (MESS:AEX_STAT) is reported. The exposure time is scaled back by the ratio of MESS:AEX_TGTB/MESS:AEX_STAT.

MESS:AEX_MINE
The minimum allowable exposure time from an MDIS automatic exposure time calculation.

In a test image that it analyzed to determine an exposure time using automatic exposure, DPU hardware generates a histogram of the image. The histogram is analyzed by the software to determine if the image is overexposed or underexposed, and the exposure time is adjusted accordingly by analyzing the histogram of raw DN values in different brightness bins. The background or dark current level (MESS:AEX_BACB) is taken into account an is assumed to be a constant value.

A threshold of number of pixels (MESS:AEX_STHR) is allowed to exceed a target brightness (MESS:AEX_TGTB). Starting with the maximum value, the number of pixels exceeding the target is counted, and the brightness of the histogram bin in which that threshold is reached (MESS:AEX_STAT) is reported. The exposure time is scaled back by the ratio of MESS:AEX_TGTB/MESS:AEX_STAT.

MESS:DLNKPRIO
Priority for downlink of an MDIS image file from the MESSENGER spacecraft:

0 Priority #0 (highest)
1 Priority #1
.
.
9 Priority #9 (lowest).

MESS:WVLRATIO
Commanded (lossy) wavelet compression ratio for an MDIS image:

0: no wavelet compression (Note: During cruise this expanded an image to 16 bits/pixel. Following a software update prior to Mercury orbit, this caused an image to retain Fast-compressed format)
1: '1x' compression (actually lossless, with an indeterminate ratio)
2: 2x compression
.....
32: 32x compression.

MESS:PIXELBIN
Pixel binning done to MDIS images by the MESSENGER spacecraft main processor (MP). This is in addition to on-chip binning as described by MESS:FPU_BIN.

0 - no further binning
2 - 2x2 binning
4 - 4x4 binning
8 - 8x8 binning.

MESS:SUBFRAME
Number of rectangular subframes within an MDIS image to be retained after image compression by the MESSENGER spacecraft main processor (MP). Subframes may overlap each other, and are defined in the original 1024x1024 pixel MDIS coordinate system before pixel binning as described by MESS:FPU_BIN and MESS:PIXELBIN. Either a full image may be specified, or up to five discrete regions within the full image. In all cases, the first four columns of the original 1024x1024 image, which are physically masked and serve as a dark current reference, are downlinked as subframe 0, even if the full image case is described. Within the subframes, pixel binning as described by MESS:FPU_BIN and MESS:PIXELBIN is performed.

0 - no subframes (full image)
1 - 1 subframe
2 - 2 subframes
3 - 3 subframes
4 - 4 subframes
5 - 5 subframes.

MESS:SUBF_X1

The zero-based starting column of the FIRST rectangular subframe within an MDIS image to be retained after image compression by the MESSENGER spacecraft main processor (MP). There may be up to five subframes per image as defined by MESS:SUBFRAME. Subframes are defined in the original 1024x1024 pixel MDIS coordinate system before pixel binning as described by MESS:FPU_BIN and MESS:PIXELBIN.

MESS:SUBF_Y1
The zero-based starting row of the FIRST rectangular subframe within an MDIS image to be retained after image compression by the MESSENGER spacecraft main processor (MP). There may be up to five subframes per image as defined by MESS:SUBFRAME. Subframes are defined in the original 1024x1024 pixel MDIS coordinate system before pixel binning as described by MESS:FPU_BIN and MESS:PIXELBIN.

MESS:SUBF_DX1
The number of columns in the FIRST rectangular subframe within an MDIS image to be retained after image compression by the MESSENGER spacecraft main processor (MP). There may be up to five subframes per image as defined by MESS:SUBFRAME. Subframes are defined in the original 1024x1024 pixel MDIS coordinate system before pixel binning as described by MESS:FPU_BIN and MESS:PIXELBIN.

MESS:SUBF_DY1
The number of rows in the FIRST rectangular subframe within an MDIS image to be retained after image compression by the MESSENGER spacecraft main processor (MP). There may be up to five subframes per image as defined by MESS:SUBFRAME. Subframes are defined in the original 1024x1024 pixel MDIS coordinate system before pixel binning as described by MESS:FPU_BIN and MESS:PIXELBIN.

MESS:SUBF_X2
The zero-based starting column of the SECOND rectangular subframe within an MDIS image to be retained after image compression by the MESSENGER spacecraft main processor (MP). There may be up to five subframes per image as defined by MESS:SUBFRAME. Subframes are defined in the original 1024x1024 pixel MDIS coordinate system before pixel binning as described by MESS:FPU_BIN and MESS:PIXELBIN.

MESS:SUBF_Y2
The zero-based starting row of the SECOND rectangular subframe within an MDIS image to be retained after image compression by the MESSENGER spacecraft main processor (MP). There may be up to five subframes per image as defined by MESS:SUBFRAME. Subframes are defined in the original 1024x1024 pixel MDIS coordinate system before pixel binning as described by MESS:FPU_BIN and MESS:PIXELBIN.

MESS:SUBF_DX2
The number of columns in the SECOND rectangular subframe within an MDIS image to be retained after image compression by the MESSENGER spacecraft main processor (MP). There may be up to five subframes per image as defined by MESS:SUBFRAME. Subframes are defined in the original 1024x1024 pixel MDIS coordinate system before pixel binning as described by MESS:FPU_BIN and MESS:PIXELBIN.

MESS:SUBF_DY2

The number of rows in the SECOND rectangular subframe within an MDIS image to be retained after image compression by the MESSENGER spacecraft main processor (MP). There may be up to five subframes per image as defined by MESS:SUBFRAME. Subframes are defined in the original 1024x1024 pixel MDIS coordinate system before pixel binning as described by MESS:FPU_BIN and MESS:PIXELBIN.

MESS:SUBF_X3
The zero-based starting column of the THIRD rectangular subframe within an MDIS image to be retained after image compression by the MESSENGER spacecraft main processor (MP). There may be up to five subframes per image as defined by MESS:SUBFRAME. Subframes are defined in the original 1024x1024 pixel MDIS coordinate system before pixel binning as described by MESS:FPU_BIN and MESS:PIXELBIN.

MESS:SUBF_Y3
The zero-based starting row of the THIRD rectangular subframe within an MDIS image to be retained after image compression by the MESSENGER spacecraft main processor (MP). There may be up to five subframes per image as defined by MESS:SUBFRAME. Subframes are defined in the original 1024x1024 pixel MDIS coordinate system before pixel binning as described by MESS:FPU_BIN and MESS:PIXELBIN.

MESS:SUBF_DX3
The number of columns in the THIRD rectangular subframe within an MDIS image to be retained after image compression by the MESSENGER spacecraft main processor (MP). There may be up to five subframes per image as defined by MESS:SUBFRAME. Subframes are defined in the original 1024x1024 pixel MDIS coordinate system before pixel binning as described by MESS:FPU_BIN and MESS:PIXELBIN.

MESS:SUBF_DY3
The number of rows in the THIRD rectangular subframe within an MDIS image to be retained after image compression by the MESSENGER spacecraft main processor (MP). There may be up to five subframes per image as defined by MESS:SUBFRAME. Subframes are defined in the original 1024x1024 pixel MDIS coordinate system before pixel binning as described by MESS:FPU_BIN and MESS:PIXELBIN.

MESS:SUBF_X4
The zero-based starting column of the FOURTH rectangular subframe within an MDIS image to be retained after image compression by the MESSENGER spacecraft main processor (MP). There may be up to five subframes per image as defined by MESS:SUBFRAME. Subframes are defined in the original 1024x1024 pixel MDIS coordinate system before pixel binning as described by MESS:FPU_BIN and MESS:PIXELBIN.

MESS:SUBF_Y4
The zero-based starting row of the FOURTH rectangular subframe within an MDIS image to be retained after image compression by the MESSENGER spacecraft main processor (MP). There may be up to five subframes per image as defined by MESS:SUBFRAME. Subframes are defined in the original 1024x1024 pixel MDIS coordinate system before pixel binning as described by MESS:FPU_BIN and MESS:PIXELBIN.

MESS:SUBF_DX4

The number of columns in the FOURTH rectangular subframe within an MDIS image to be retained after image compression by the MESSENGER spacecraft main processor (MP). There may be up to five subframes per image as defined by MESS:SUBFRAME. Subframes are defined in the original 1024x1024 pixel MDIS coordinate system before pixel binning as described by MESS:FPU_BIN and MESS:PIXELBIN.

MESS:SUBF_DY4
The number of rows in the FOURTH rectangular subframe within an MDIS image to be retained after image compression by the MESSENGER spacecraft main processor (MP). There may be up to five subframes per image as defined by MESS:SUBFRAME. Subframes are defined in the original 1024x1024 pixel MDIS coordinate system before pixel binning as described by MESS:FPU_BIN and MESS:PIXELBIN.

MESS:SUBF_X5
The zero-based starting column of the FIFTH rectangular subframe within an MDIS image to be retained after image compression by the MESSENGER spacecraft main processor (MP). There may be up to five subframes per image as defined by MESS:SUBFRAME. Subframes are defined in the original 1024x1024 pixel MDIS coordinate system before pixel binning as described by MESS:FPU_BIN and MESS:PIXELBIN.

MESS:SUBF_Y5
The zero-based starting row of the FIFTH rectangular subframe within an MDIS image to be retained after image compression by the MESSENGER spacecraft main processor (MP). There may be up to five subframes per image as defined by MESS:SUBFRAME. Subframes are defined in the original 1024x1024 pixel MDIS coordinate system before pixel binning as described by MESS:FPU_BIN and MESS:PIXELBIN.

MESS:SUBF_DX5
The number of columns in the FIFTH rectangular subframe within an MDIS image to be retained after image compression by the MESSENGER spacecraft main processor (MP). There may be up to five subframes per image as defined by MESS:SUBFRAME. Subframes are defined in the original 1024x1024 pixel MDIS coordinate system before pixel binning as described by MESS:FPU_BIN and MESS:PIXELBIN.

MESS:SUBF_DY5
The number of rows in the FIFTH rectangular subframe within an MDIS image to be retained after image compression by the MESSENGER spacecraft main processor (MP). There may be up to five subframes per image as defined by MESS:SUBFRAME. Subframes are defined in the original 1024x1024 pixel MDIS coordinate system before pixel binning as described by MESS:FPU_BIN and MESS:PIXELBIN.

MESS:CRITOPNV
When true, this indicates that the MDIS image is a critical optical navigation image and will be compressed by the MESSENGER Main Processor (MP) before other images. Normally, the MP compresses images in the order that they are received.

0 = False
1 = True.

MESS:JAILBARS
When true, this indicates that an MDIS image is subsampled by jailbars, a subset of all the image columns that are downlinked to save data volume in optical navigation images. The start column, stop column, and column spacing are indicated by MESS:JB_X0, MESS:JB_X1, and MESS:JB_SPACE respectively. Jailbars are defined in the original 1024x1024 pixel MDIS coordinate system before pixel binning as described by MESS:FPU_BIN and MESS:PIXELBIN.

MESS:JB_X0
The start column for jailbars in an MDIS image, a subset of all the image columns that are downlinked to save data volume in optical navigation images. Jailbars are defined in the original 1024x1024 pixel MDIS coordinate system before pixel binning as described by MESS:FPU_BIN and MESS:PIXELBIN.

MESS:JB_X1
The stop column for jailbars in an MDIS image, a subset of all the image columns that are downlinked to save data volume in optical navigation images. Jailbars are defined in the original 1024x1024 pixel MDIS coordinate system before pixel binning as described by MESS:FPU_BIN and MESS:PIXELBIN.

MESS:JB_SPACE
The column spacing for jailbars in an MDIS image, a subset of all the image columns that are downlinked to save data volume in optical navigation images. Jailbars are defined in the original 1024x1024 pixel MDIS coordinate system before pixel binning as described by MESS:FPU_BIN and MESS:PIXELBIN.

APPENDIX C. CDR LABEL

```
PDS_VERSION_ID               = PDS3

/*** FILE FORMAT ***/
RECORD_TYPE                  = FIXED_LENGTH
RECORD_BYTES                 = 2048
FILE_RECORDS                 = 517
LABEL_RECORDS                = 5

/*** POINTERS TO START BYTE OFFSET OF OBJECTS IN IMAGE FILE ***/
^IMAGE                       = 6

/*** GENERAL DATA DESCRIPTION PARAMETERS ***/
MISSION_NAME                 = MESSENGER
INSTRUMENT_HOST_NAME         = MESSENGER
DATA_SET_ID                  = "MESS-E/V/H-MDIS-4-CDR-CALDATA-V1.0"
DATA_QUALITY_ID              = "0000000000000000"
PRODUCT_ID                   = "CW0219521349J_IF_3"
OBSERVATION_TYPE             = Color
SITE_ID                      = "N/A"
SOURCE_PRODUCT_ID            = ("EW0219521349J", "MDISLUTINV_0",
                                "MDISWAC_BINNED_DARKMODEL_0",
                                "MDISWAC_BINNED_FLAT_FIL10_4",
                                "MDISWAC_BINNED_RESP_4", "MDISWAC_SOLAR_0")
PRODUCER_INSTITUTION_NAME    = "APPLIED COHERENT TECHNOLOGY CORPORATION"
SOFTWARE_NAME                = "mdiscal"
SOFTWARE_VERSION_ID          = "1.0"
MISSION_PHASE_NAME           = "MERCURY ORBIT"
TARGET_NAME                  = "MERCURY"
SEQUENCE_NAME                = "N/A"
OBSERVATION_ID               = "521810"

/*** TIME PARAMETERS ***/
START_TIME                   = 2011-07-19T00:04:42.374370
STOP_TIME                    = 2011-07-19T00:04:42.438370
SPACECRAFT_CLOCK_START_COUNT = "1/0219521349:926000"
SPACECRAFT_CLOCK_STOP_COUNT  = "1/0219521349:990000"
ORBIT_NUMBER                 = 246
PRODUCT_CREATION_TIME        = 2011-11-27T02:50:06

/*** INSTRUMENT ENGINEERING PARAMETERS ***/
INSTRUMENT_NAME              = "MERCURY DUAL IMAGING SYSTEM WIDE ANGLE
                                CAMERA"
INSTRUMENT_ID                = "MDIS-WAC"
FILTER_NAME                  = "900 BW 5"
FILTER_NUMBER                = "10"
CENTER_FILTER_WAVELENGTH     = 898.8 <NM>
BANDWIDTH                    = 5.1 <NM>
EXPOSURE_DURATION            = 64 <MS>
EXPOSURE_TYPE                = AUTO
DETECTOR_TEMPERATURE         = -32.52 <DEGC>
FOCAL_PLANE_TEMPERATURE      = -25.72 <DEGC>
FILTER_TEMPERATURE           = -27.33 <DEGC>
OPTICS_TEMPERATURE           = "N/A"

/*** INSTRUMENT RAW PARAMETERS ***/
MESS:MET_EXP                 = 219521349
MESS:IMG_ID_LSB              = 63058
MESS:IMG_ID_MSB              = 7
MESS:ATT_CLOCK_COUNT         = 219521347
```

```
MESS:ATT_Q1                  = -0.91901916
MESS:ATT_Q2                  = 0.19018540
MESS:ATT_Q3                  = 0.30086851
MESS:ATT_Q4                  = 0.16944434
MESS:ATT_FLAG                = 7
MESS:PIV_POS_MOTOR           = 25547
MESS:PIV_GOAL                = "N/A"
MESS:PIV_POS                 = 1328
MESS:PIV_READ                = 10072
MESS:PIV_CAL                 = -26758
MESS:FW_GOAL                 = 33796
MESS:FW_POS                  = 33845
MESS:FW_READ                 = 33884
MESS:CCD_TEMP                = 1052
MESS:CAM_T1                  = 473
MESS:CAM_T2                  = 478
MESS:EXPOSURE                = 64
MESS:DPU_ID                  = 0
MESS:IMAGER                  = 0
MESS:SOURCE                  = 0
MESS:FPU_BIN                 = 1
MESS:COMP12_8                = 1
MESS:COMP_ALG                = 1
MESS:COMP_FST                = 1
MESS:TIME_PLS                = 2
MESS:LATCH_UP                = 0
MESS:EXP_MODE                = 1
MESS:PIV_STAT                = 3
MESS:PIV_MPEN                = 0
MESS:PIV_PV                  = 1
MESS:PIV_RV                  = 1
MESS:FW_PV                   = 1
MESS:FW_RV                   = 0
MESS:AEX_STAT                = 640
MESS:AEX_STHR                = 5
MESS:AEX_TGTB                = 1830
MESS:AEX_BACB                = 240
MESS:AEX_MAXE                = 64
MESS:AEX_MINE                = 1
MESS:DLNKPRIO                = 5
MESS:WVLRATIO                = 0
MESS:PIXELBIN                = 0
MESS:SUBFRAME                = 0
MESS:SUBF_X1                 = 0
MESS:SUBF_Y1                 = 0
MESS:SUBF_DX1                = 0
MESS:SUBF_DY1                = 0
MESS:SUBF_X2                 = 0
MESS:SUBF_Y2                 = 0
MESS:SUBF_DX2                = 0
MESS:SUBF_DY2                = 0
MESS:SUBF_X3                 = 0
MESS:SUBF_Y3                 = 0
MESS:SUBF_DX3                = 0
MESS:SUBF_DY3                = 0
MESS:SUBF_X4                 = 0
MESS:SUBF_Y4                 = 0
MESS:SUBF_DX4                = 0
MESS:SUBF_DY4                = 0
MESS:SUBF_X5                 = 0
MESS:SUBF_Y5                 = 0
MESS:SUBF_DX5                = 0
MESS:SUBF_DY5                = 0
```

```
MESS:CRITOPNV                = 0
MESS:JAILBARS                = 0
MESS:JB_X0                   = 0
MESS:JB_X1                   = 0
MESS:JB_SPACE                = 0

/*** GEOMETRY INFORMATION ***/
RIGHT_ASCENSION              = 149.98178 <DEG>
DECLINATION                  = -51.57142 <DEG>
TWIST_ANGLE                  = 170.32592 <DEG>
RA_DEC_REF_PIXEL             = (256.00000, 256.00000)
RETICLE_POINT_RA             = (158.75866 <DEG>, 143.91425 <DEG>,
                                157.83292 <DEG>, 139.36917 <DEG>)
RETICLE_POINT_DECLINATION    = (-46.98057 <DEG>, -45.40886 <DEG>,
                                -57.33852 <DEG>, -55.38629 <DEG>)

/*** TARGET PARAMETERS ***/
SC_TARGET_POSITION_VECTOR    = (1782.56430 <KM>, -1037.82187 <KM>,
                                2581.83536 <KM>)
TARGET_CENTER_DISTANCE       = 3304.61549 <KM>

/*** TARGET WITHIN SENSOR FOV ***/
SLANT_DISTANCE               = 864.62466 <KM>
CENTER_LATITUDE              = 61.97236 <DEG>
CENTER_LONGITUDE             = 68.80775 <DEG>
HORIZONTAL_PIXEL_SCALE       = 308.77593 <M>
VERTICAL_PIXEL_SCALE         = 308.77593 <M>
SMEAR_MAGNITUDE              = 1.01166 <PIXELS>
SMEAR_AZIMUTH                = 58.01630 <DEG>
NORTH_AZIMUTH                = 229.94935 <DEG>
RETICLE_POINT_LATITUDE       = (64.58206 <DEG>, 62.08083 <DEG>,
                                61.62932 <DEG>, 59.34746 <DEG>)
RETICLE_POINT_LONGITUDE      = (68.28054 <DEG>, 74.40417 <DEG>,
                                63.29226 <DEG>, 69.25262 <DEG>)

/*** SPACECRAFT POSITION WITH RESPECT TO CENTRAL BODY ***/
SUB_SPACECRAFT_LATITUDE      = 61.98444 <DEG>
SUB_SPACECRAFT_LONGITUDE     = 68.97680 <DEG>
SPACECRAFT_ALTITUDE          = 864.61549 <KM>
SUB_SPACECRAFT_AZIMUTH       = 311.22633 <DEG>

/*** SPACECRAFT LOCATION ***/
SPACECRAFT_SOLAR_DISTANCE    = 68709188.94471 <KM>
SC_SUN_POSITION_VECTOR       = (-37332568.82737 <KM>, -52398764.56346 <KM>,
                                -24116413.96251 <KM>)
SC_SUN_VELOCITY_VECTOR       = (-28.04042 <KM/S>, 20.54300 <KM/S>,
                                13.11121 <KM/S>)

/*** VIEWING AND LIGHTING GEOMETRY (SUN ON TARGET) ***/
SOLAR_DISTANCE               = 68710272.30205 <KM>
SUB_SOLAR_AZIMUTH            = 0.54300 <DEG>
SUB_SOLAR_LATITUDE           = -0.01751 <DEG>
SUB_SOLAR_LONGITUDE          = 114.66501 <DEG>
INCIDENCE_ANGLE              = 70.91576 <DEG>
PHASE_ANGLE                  = 70.71577 <DEG>
EMISSION_ANGLE               = 0.30704 <DEG>
LOCAL_HOUR_ANGLE             = 134.14274 <DEG>

OBJECT = IMAGE
  LINES                      = 512
  LINE_SAMPLES               = 512
  BANDS                      = 1
  BAND_STORAGE_TYPE          = BAND_SEQUENTIAL
```

```
  OFFSET                      = 0.0
  SCALING_FACTOR              = 1.0
  SAMPLE_BITS                 = 32
  SAMPLE_BIT_MASK             = 2#11111111111111111111111111111111#
  SAMPLE_TYPE                 = IEEE_REAL
  CORE_NULL                   = 16#FF7FFFFB#
  CORE_LOW_REPR_SATURATION    = 16#FF7FFFFC#
  CORE_LOW_INSTR_SATURATION   = 16#FF7FFFFD#
  CORE_HIGH_REPR_SATURATION   = 16#FF7FFFFF#
  CORE_HIGH_INSTR_SATURATION  = 16#FF7FFFFE#
  UNIT                        = "I over F"
  DARK_STRIP_MEAN             = -3.92434836976e-05

  /*** IMAGE STATISTICS ***/
  MINIMUM                     = 0.003597701434046
  MAXIMUM                     = 0.090573020279408
  MEAN                        = 0.03210020726269
  STANDARD_DEVIATION          = 0.0068205686942852

  /*** PIXEL COUNTS ***/
  SATURATED_PIXEL_COUNT       = 0
END_OBJECT = IMAGE

/*** GEOMETRY FOR EACH SUBFRAME ***/
GROUP = SUBFRAME1_PARAMETERS
  RETICLE_POINT_LATITUDE  = ("N/A", "N/A", "N/A", "N/A")
  RETICLE_POINT_LONGITUDE = ("N/A", "N/A", "N/A", "N/A")
END_GROUP = SUBFRAME1_PARAMETERS

GROUP = SUBFRAME2_PARAMETERS
  RETICLE_POINT_LATITUDE  = ("N/A", "N/A", "N/A", "N/A")
  RETICLE_POINT_LONGITUDE = ("N/A", "N/A", "N/A", "N/A")
END_GROUP = SUBFRAME2_PARAMETERS

GROUP = SUBFRAME3_PARAMETERS
  RETICLE_POINT_LATITUDE  = ("N/A", "N/A", "N/A", "N/A")
  RETICLE_POINT_LONGITUDE = ("N/A", "N/A", "N/A", "N/A")
END_GROUP = SUBFRAME3_PARAMETERS

GROUP = SUBFRAME4_PARAMETERS
  RETICLE_POINT_LATITUDE  = ("N/A", "N/A", "N/A", "N/A")
  RETICLE_POINT_LONGITUDE = ("N/A", "N/A", "N/A", "N/A")
END_GROUP = SUBFRAME4_PARAMETERS

GROUP = SUBFRAME5_PARAMETERS
  RETICLE_POINT_LATITUDE  = ("N/A", "N/A", "N/A", "N/A")
  RETICLE_POINT_LONGITUDE = ("N/A", "N/A", "N/A", "N/A")
END_GROUP = SUBFRAME5_PARAMETERS
END
```

APPENDIX D. DDR LABEL

```
PDS_VERSION_ID               = PDS3

/* ** FILE FORMAT ** */
RECORD_TYPE                  = FIXED_LENGTH
RECORD_BYTES                 = 4096
FILE_RECORDS                 = 5123
LABEL_RECORDS                = 3
LABEL_REVISION_NOTE          = "2007-12-20, S. Murchie (JHU/APL); 2008-01-02,
                                S. Murchie (JHU/APL); 2008-01-11, J. Ward
                                (GEO)"

/* ** POINTERS TO START BYTE OFFSET OF OBJECTS IN IMAGE FILE ** */
^IMAGE                       = 4

/* ** GENERAL DATA DESCRIPTION PARAMETERS ** */
MISSION_NAME                 = MESSENGER
SPACECRAFT_NAME              = "MESSENGER"
INSTRUMENT_HOST_NAME         = MESSENGER
DATA_SET_ID                  = "MESS-E/V/H-MDIS-6-DDR-GEOMDATA-V1.0"
DATA_QUALITY_ID              = "0000001000000000"

/* pcnnnnnnnnnnf_tt_v                   */
/* p = product type (C calibrated       */
/* or D derived)                        */
/* c = camera (W WAC or N NAC)          */
/* nnnnnnnnnn = Mission Elapsed Time    */
/* f = filter                           */
/* tt = data type (RA radiance, IF I/F, */
/* or DE derived products)              */
/* v = version number                   */
PRODUCT_ID                   = "DW0131786030E_DE_0"
SOURCE_PRODUCT_ID            = ("msgr_20040803_20120401_od191sc.bsp",
                                "msgr20080109.bc", "msgr20080110.bc",
                                "msgr20080111.bc", "msgr20080112.bc",
                                "msgr20080113.bc", "msgr20080114.bc",
                                "msgr20080115.bc", "msgr20070825.bc",
                                "msgr20070926.bc", "msgr20071009.bc",
                                "msgr20080708.bc", "m1_mdishdr_atthist.bc",
                                "0188372363_0172_mdis_atthist.bc",
                                "0190233252_010868_mdis_pivot_pvtres.bc",
                                "msgr_v210.tf", "de405.bsp",
                                "pck00009_MSGR_v10.tpc", "msgr_mdis_v120.ti",
                                "mdisAddendum007.ti", "naif0009.tls",
                                "messenger_0983.tsc")
PRODUCER_INSTITUTION_NAME    = "APPLIED COHERENT TECHNOLOGY CORPORATION"
SOFTWARE_NAME                = "mdisddr"
SOFTWARE_VERSION_ID          = "1.0"
MISSION_PHASE_NAME           = "MERCURY 2 FLYBY"
TARGET_NAME                  = "MERCURY"
SEQUENCE_NAME                = "08280_DEP_WAC_FRAME_4"
OBSERVATION_ID               = "7187"
OBSERVATION_TYPE             = ("Color","Targeted")
SITE_ID                      = 347

/* ** TIME PARAMETERS ** */
START_TIME                   = 2008-10-06T13:09:47.289862
STOP_TIME                    = 2008-10-06T13:09:47.339862
SPACECRAFT_CLOCK_START_COUNT = "1/0131786030:940000"
SPACECRAFT_CLOCK_STOP_COUNT  = "1/0131786030:990000"
```

```
ORBIT_NUMBER                 = "N/A"
PRODUCT_CREATION_TIME        = 2010-11-11T17:09:42

/* ** INSTRUMENT ENGINEERING PARAMETERS ** */
INSTRUMENT_NAME              = "MERCURY DUAL IMAGING SYSTEM WIDE ANGLE
                                CAMERA"
INSTRUMENT_ID                = "MDIS-WAC"
FILTER_NAME                  = "630 BW 5"
FILTER_NUMBER                = "5"
CENTER_FILTER_WAVELENGTH     = 628.8 <NM>
BANDWIDTH                    = 5.5 <NM>
EXPOSURE_DURATION            = 50 <MS>
EXPOSURE_TYPE                = AUTO
DETECTOR_TEMPERATURE         = -41.22 <DEGC>
FOCAL_PLANE_TEMPERATURE      = -25.72 <DEGC>
FILTER_TEMPERATURE           = -26.77 <DEGC>
OPTICS_TEMPERATURE           = "N/A"

/* ** INSTRUMENT RAW PARAMETERS ** */
MESS:MET_EXP                 = 131786030
MESS:IMG_ID_LSB              = "N/A"
MESS:IMG_ID_MSB              = "N/A"
MESS:ATT_CLOCK_COUNT         = 131786028
MESS:ATT_Q1                  = -0.51554728
MESS:ATT_Q2                  = -0.68456620
MESS:ATT_Q3                  = 0.27649912
MESS:ATT_Q4                  = -0.43488884
MESS:ATT_FLAG                = 7
MESS:PIV_POS_MOTOR           = "N/A"
MESS:PIV_GOAL                = 9102
MESS:PIV_POS                 = 9102
MESS:PIV_READ                = 13484
MESS:PIV_CAL                 = -26758
MESS:FW_GOAL                 = 61104
MESS:FW_POS                  = 61152
MESS:FW_READ                 = 61152
MESS:CCD_TEMP                = 1020
MESS:CAM_T1                  = 473
MESS:CAM_T2                  = 479
MESS:EXPOSURE                = 50
MESS:DPU_ID                  = 0
MESS:IMAGER                  = 0
MESS:SOURCE                  = 0
MESS:FPU_BIN                 = 0
MESS:COMP12_8                = 0
MESS:COMP_ALG                = 0
MESS:COMP_FST                = 1
MESS:TIME_PLS                = 2
MESS:LATCH_UP                = 0
MESS:EXP_MODE                = 1
MESS:PIV_STAT                = 3
MESS:PIV_MPEN                = 1
MESS:PIV_PV                  = 1
MESS:PIV_RV                  = 1
MESS:FW_PV                   = 1
MESS:FW_RV                   = 1
MESS:AEX_STAT                = 128
MESS:AEX_STHR                = 5
MESS:AEX_TGTB                = 2400
MESS:AEX_BACB                = 240
MESS:AEX_MAXE                = 500
MESS:AEX_MINE                = 1
MESS:DLNKPRIO                = 5
```

```
MESS:WVLRATIO                = 1
MESS:PIXELBIN                = 0
MESS:SUBFRAME                = 0
MESS:SUBF_X1                 = 4
MESS:SUBF_Y1                 = 0
MESS:SUBF_DX1                = 0
MESS:SUBF_DY1                = 0
MESS:SUBF_X2                 = 4
MESS:SUBF_Y2                 = 0
MESS:SUBF_DX2                = 0
MESS:SUBF_DY2                = 0
MESS:SUBF_X3                 = 0
MESS:SUBF_Y3                 = 0
MESS:SUBF_DX3                = 0
MESS:SUBF_DY3                = 0
MESS:SUBF_X4                 = 0
MESS:SUBF_Y4                 = 0
MESS:SUBF_DX4                = 0
MESS:SUBF_DY4                = 0
MESS:SUBF_X5                 = 0
MESS:SUBF_Y5                 = 0
MESS:SUBF_DX5                = 0
MESS:SUBF_DY5                = 0
MESS:CRITOPNV                = 0
MESS:JAILBARS                = 0
MESS:JB_X0                   = 0
MESS:JB_X1                   = 0
MESS:JB_SPACE                = 0

/* ** GEOMETRY INFORMATION ** */
RIGHT_ASCENSION              = 342.58823 <DEG>
DECLINATION                  = -14.45851 <DEG>
TWIST_ANGLE                  = -155.83936 <DEG>
RA_DEC_REF_PIXEL             = (512.00000, 512.00000)
RETICLE_POINT_RA             = (345.22873 <DEG>, 335.53991 <DEG>,
                                349.79903 <DEG>, 339.77218 <DEG>)
RETICLE_POINT_DECLINATION    = (-7.55253 <DEG>, -11.73914 <DEG>,
                                -16.97708 <DEG>, -21.34668 <DEG>)

/* ** TARGET PARAMETERS ** */
SC_TARGET_POSITION_VECTOR    = (-80016.72571 <KM>, 25094.39274 <KM>,
                                21434.60743 <KM>)
TARGET_CENTER_DISTANCE       = 86555.45816 <KM>

/* ** TARGET WITHIN SENSOR FOV ** */
SLANT_DISTANCE               = 84122.07770 <KM>
CENTER_LATITUDE              = -3.94405 <DEG>
CENTER_LONGITUDE             = 330.98392 <DEG>
HORIZONTAL_PIXEL_SCALE       = 15075.06418 <M>
VERTICAL_PIXEL_SCALE         = 15075.06418 <M>
SMEAR_MAGNITUDE              = 0.00069 <PIXELS>
SMEAR_AZIMUTH                = 180.06864 <DEG>
NORTH_AZIMUTH                = 270.81677 <DEG>
RETICLE_POINT_LATITUDE       = ("N/A", "N/A", "N/A", "N/A")
RETICLE_POINT_LONGITUDE      = ("N/A", "N/A", "N/A", "N/A")

/* ** SPACECRAFT POSITION WITH RESPECT TO CENTRAL BODY ** */
SUB_SPACECRAFT_LATITUDE      = -0.16309 <DEG>
SUB_SPACECRAFT_LONGITUDE     = 329.24393 <DEG>
SPACECRAFT_ALTITUDE          = 84115.45816 <KM>
SUB_SPACECRAFT_AZIMUTH       = 246.02307 <DEG>

/* ** SPACECRAFT LOCATION ** */
```

```
SPACECRAFT_SOLAR_DISTANCE    = 51025026.96372 <KM>
SC_SUN_POSITION_VECTOR       = (49732482.40227 <KM>, 11374911.48709 <KM>,
                                919216.74104 <KM>)
SC_SUN_VELOCITY_VECTOR       = (24.64534 <KM/S>, -44.69318 <KM/S>,
                                -26.42722 <KM/S>)

/* ** VIEWING AND LIGHTING GEOMETRY (SUN ON TARGET) ** */
SOLAR_DISTANCE               = 51097058.91937 <KM>
SUB_SOLAR_AZIMUTH            = 354.41930 <DEG>
SUB_SOLAR_LATITUDE           = -0.01059 <DEG>
SUB_SOLAR_LONGITUDE          = 2.89072 <DEG>
INCIDENCE_ANGLE              = 32.12416 <DEG>
PHASE_ANGLE                  = 33.69859 <DEG>
EMISSION_ANGLE               = 4.28212 <DEG>
LOCAL_HOUR_ANGLE             = 148.09320 <DEG>

OBJECT = IMAGE
  LINES                      = 1024
  LINE_SAMPLES               = 1024
  SAMPLE_TYPE                = IEEE_REAL
  SAMPLE_BITS                = 32
  BANDS                      = 5
  BAND_STORAGE_TYPE          = BAND_SEQUENTIAL
  BAND_NAME                  = ("Latitude, planetocentric, deg N",
                                "Longitude, planetocentric, deg E",
                                "Incidence angle at equipotential surface,
                                deg",
                                "Emission angle at equipotential surface,
                                deg",
                                "Phase angle at equipotential surface, deg")
  CORE_NULL                  = 16#FF7FFFFB#
  CORE_LOW_REPR_SATURATION   = 16#FF7FFFFC#
  CORE_LOW_INSTR_SATURATION  = 16#FF7FFFFD#
  CORE_HIGH_REPR_SATURATION  = 16#FF7FFFFF#
  CORE_HIGH_INSTR_SATURATION = 16#FF7FFFFE#
END_OBJECT = IMAGE

/* ** GEOMETRY FOR EACH SUBFRAME ** */
GROUP = SUBFRAME1_PARAMETERS
  RETICLE_POINT_LATITUDE  = ("N/A", "N/A", "N/A", "N/A")
  RETICLE_POINT_LONGITUDE = ("N/A", "N/A", "N/A", "N/A")
END_GROUP = SUBFRAME1_PARAMETERS

GROUP = SUBFRAME2_PARAMETERS
  RETICLE_POINT_LATITUDE  = ("N/A", "N/A", "N/A", "N/A")
  RETICLE_POINT_LONGITUDE = ("N/A", "N/A", "N/A", "N/A")
END_GROUP = SUBFRAME2_PARAMETERS

GROUP = SUBFRAME3_PARAMETERS
  RETICLE_POINT_LATITUDE  = ("N/A", "N/A", "N/A", "N/A")
  RETICLE_POINT_LONGITUDE = ("N/A", "N/A", "N/A", "N/A")
END_GROUP = SUBFRAME3_PARAMETERS

GROUP = SUBFRAME4_PARAMETERS
  RETICLE_POINT_LATITUDE  = ("N/A", "N/A", "N/A", "N/A")
  RETICLE_POINT_LONGITUDE = ("N/A", "N/A", "N/A", "N/A")
END_GROUP = SUBFRAME4_PARAMETERS

GROUP = SUBFRAME5_PARAMETERS
  RETICLE_POINT_LATITUDE  = ("N/A", "N/A", "N/A", "N/A")
  RETICLE_POINT_LONGITUDE = ("N/A", "N/A", "N/A", "N/A")
END_GROUP = SUBFRAME5_PARAMETERS
END
```

APPENDIX E. BDR LABEL

```
PDS_VERSION_ID                  = PDS3
RECORD_TYPE                     = FIXED_LENGTH
RECORD_BYTES                    = 26008
FILE_RECORDS                    = 25506

^IMAGE                          = "MDIS_BDR_256PPD_H03NE0.IMG"

/* Map-projected Multispectral RDR Identification */

DATA_SET_ID                     = "MESS-H-MDIS-5-RDR-BDR-V1.0"
PRODUCT_ID                      = "MDIS_BDR_256PPD_H03NE0"

INSTRUMENT_HOST_NAME            = "MESSENGER"
SPACECRAFT_ID                   = "MESSENGER"
INSTRUMENT_NAME = {"MERCURY DUAL IMAGING SYSTEM NARROW ANGLE CAMERA",
                   "MERCURY DUAL IMAGING SYSTEM WIDE ANGLE CAMERA"}
INSTRUMENT_ID                   = {"MDIS-NAC","MDIS-WAC"}
TARGET_NAME                     = MERCURY
PRODUCT_TYPE                    = MAP_PROJECTED_BDR
PRODUCT_CREATION_TIME           = 2012-04-25T21:35:55.614
START_TIME                      = "N/A"
STOP_TIME                       = "N/A"
SPACECRAFT_CLOCK_START_COUNT    = "N/A"
SPACECRAFT_CLOCK_STOP_COUNT     = "N/A"
PRODUCT_VERSION_ID              = "1"
PRODUCER_INSTITUTION_NAME       = "APPLIED COHERENT TECHNOLOGY CORP"
SOFTWARE_NAME                   = "PIPE_create_mdis_bdr"
SOFTWARE_VERSION_ID             = "09.20.11"

OBJECT                          = IMAGE
  LINES                         = 5441
  LINE_SAMPLES                  = 8332
  SAMPLE_TYPE                   = PC_REAL
  SAMPLE_BITS                   = 32
  UNIT                          = "Reflectance"
  BANDS                         = 6
  BAND_NAME                     = ("Reflectance 750nm",
                                   "Observation ID",
                                   "BDR metric",
                                   "Solar Incidence Angle",
                                   "Emision Angle",
                                   "Phase Angle")
  BAND_STORAGE_TYPE             = BAND_SEQUENTIAL
END_OBJECT                      = IMAGE

/* Map projection information about this RDR is in the IMAGE_MAP_PROJECTION */
/* object below.                                                            */

OBJECT                          = IMAGE_MAP_PROJECTION
  MAP_PROJECTION_TYPE           = "EQUIRECTANGULAR"
  A_AXIS_RADIUS                 = 2440  <KM>
  B_AXIS_RADIUS                 = 2440  <KM>
  C_AXIS_RADIUS                 = 2440  <KM>
  FIRST_STANDARD_PARALLEL       = "N/A"
  SECOND_STANDARD_PARALLEL      = "N/A"
  POSITIVE_LONGITUDE_DIRECTION = "EAST"
  CENTER_LATITUDE               = 43.75 <DEGREE>
  CENTER_LONGITUDE              = 247.5 <DEGREE>
  LINE_FIRST_PIXEL              = 1
```

```
  LINE_LAST_PIXEL              = 5441
  SAMPLE_FIRST_PIXEL           = 1
  SAMPLE_LAST_PIXEL            = 8322
  MAP_PROJECTION_ROTATION      = 0.0
  MAP_RESOLUTION               = 256 <PIXEL/DEGREE>
  MAP_SCALE                    = 166.35169 <M/PIXEL>
  MAXIMUM_LATITUDE             = 65.000000    <DEGREE>
  MINIMUM_LATITUDE             = 43.745000    <DEGREE>
  WESTERNMOST_LONGITUDE        = -135.000000   <DEGREE>
  EASTERNMOST_LONGITUDE        = -89.994986   <DEGREE>
  LINE_PROJECTION_OFFSET       = 16640.0 <PIXELS>
  SAMPLE_PROJECTION_OFFSET     = 4160.816422 <PIXELS>
  COORDINATE_SYSTEM_TYPE       = "BODY-FIXED ROTATING"
  COORDINATE_SYSTEM_NAME       = "PLANETOCENTRIC"
END_OBJECT                     = IMAGE_MAP_PROJECTION

END
```

APPENDIX F. MDR LABEL

```
PDS_VERSION_ID                  = PDS3
RECORD_TYPE                     = FIXED_LENGTH
RECORD_BYTES                    = 10404
FILE_RECORDS                    = 22100

^IMAGE                          = "MDIS_MDR_064PPD_H03NE0.IMG"

/* Map-projected Multispectral RDR Identification */

DATA_SET_ID                     = "MESS-H-MDIS-5-RDR-MDR-V1.0"
PRODUCT_ID                      = "MDIS_MDR_064PPD_H03NE0"

INSTRUMENT_HOST_NAME            = "MESSENGER"
SPACECRAFT_ID                   = "MESSENGER"
INSTRUMENT_NAME = "MERCURY DUAL IMAGING SYSTEM WIDE ANGLE CAMERA"
INSTRUMENT_ID                   = "MDIS-WAC"
TARGET_NAME                     = MERCURY
PRODUCT_TYPE                    = MAP_PROJECTED_MDR
PRODUCT_CREATION_TIME           = 2012-04-25T22:37:00.333
START_TIME                      = "N/A"
STOP_TIME                       = "N/A"
SPACECRAFT_CLOCK_START_COUNT    = "N/A"
SPACECRAFT_CLOCK_STOP_COUNT     = "N/A"
PRODUCT_VERSION_ID              = "1"
PRODUCER_INSTITUTION_NAME       = "APPLIED COHERENT TECHNOLOGY CORP"
SOFTWARE_NAME                   = "PIPE_create_mdis_mdr"
SOFTWARE_VERSION_ID             = "09.20.11"

OBJECT                          = IMAGE
  LINES                         = 1360
  LINE_SAMPLES                  = 2081
  SAMPLE_TYPE                   = PC_REAL
  SAMPLE_BITS                   = 32
  UNIT                          = "Reflectance"
  BANDS                         = 13
  BAND_NAME                     = ("WAC filter 6 430 BP 40",
                                   "WAC filter 3 480 BP 10",
                                   "WAC filter 4 560 BP 5",
                                   "WAC filter 5 630 BP 5",
                                   "WAC filter 7 750 BP 5",
                                   "WAC filter 12 830 BP 5",
                                   "WAC filter 10 900 BP 5",
                                   "WAC filter 9 1000 BP 15",
                                   "Observation ID",
                                   "MDR metric",
                                   "Solar Incidence Angle (F6)",
                                   "Emission Angle (F6)",
                                   "Phase Angle (F6)")
  BAND_STORAGE_TYPE             = BAND_SEQUENTIAL
END_OBJECT                      = IMAGE

/* Map projection information about this RDR is in the IMAGE_MAP_PROJECTION */
/* object below.                                                            */

OBJECT                          = IMAGE_MAP_PROJECTION
  MAP_PROJECTION_TYPE           = "EQUIRECTANGULAR"
  A_AXIS_RADIUS                 = 2440  <KM>
  B_AXIS_RADIUS                 = 2440  <KM>
  C_AXIS_RADIUS                 = 2440  <KM>
```

```
  FIRST_STANDARD_PARALLEL      = "N/A"
  SECOND_STANDARD_PARALLEL     = "N/A"
  POSITIVE_LONGITUDE_DIRECTION = "EAST"
  CENTER_LATITUDE              = 43.75 <DEGREE>
  CENTER_LONGITUDE             = 247.5 <DEGREE>
  LINE_FIRST_PIXEL             = 1
  LINE_LAST_PIXEL              = 1360
  SAMPLE_FIRST_PIXEL           = 1
  SAMPLE_LAST_PIXEL            = 2081
  MAP_PROJECTION_ROTATION      = 0.0
  MAP_RESOLUTION               = 64 <PIXEL/DEGREE>
  MAP_SCALE                    = 166.35169 <M/PIXEL>
  MAXIMUM_LATITUDE             = 65.000000    <DEGREE>
  MINIMUM_LATITUDE             = 43.750000    <DEGREE>
  WESTERNMOST_LONGITUDE        = -135.000000   <DEGREE>
  EASTERNMOST_LONGITUDE        = -89.991525   <DEGREE>
  LINE_PROJECTION_OFFSET       = 4160.0 <PIXELS>
  SAMPLE_PROJECTION_OFFSET     = 1040.2 <PIXELS>
  COORDINATE_SYSTEM_TYPE       = "BODY-FIXED ROTATING"
  COORDINATE_SYSTEM_NAME       = "PLANETOCENTRIC"
END_OBJECT                     = IMAGE_MAP_PROJECTION

END
```

APPENDIX G. MD3 LABEL

```
PDS_VERSION_ID                  = PDS3
RECORD_TYPE                     = FIXED_LENGTH
RECORD_BYTES                    = 16648
FILE_RECORDS                    = 21768

^IMAGE                          = "MDIS_MD3_128PPD_H02NE0.IMG"

/* Map-projected Multispectral RDR Identification */

DATA_SET_ID                     = "MESS-H-MDIS-5-RDR-MD3-V1.0"
PRODUCT_ID                      = "MDIS_MD3_128PPD_H02NE0"

INSTRUMENT_HOST_NAME            = "MESSENGER"
INSTRUMENT_NAME = "MERCURY DUAL IMAGING SYSTEM WIDE ANGLE CAMERA"
INSTRUMENT_ID                   = "MDIS-WAC"
TARGET_NAME                     = MERCURY
PRODUCT_TYPE                    = MAP_PROJECTED_MD3
PRODUCT_CREATION_TIME           = 2014-01-14T02:59:15.148
START_TIME                      = "N/A"
STOP_TIME                       = "N/A"
SPACECRAFT_CLOCK_START_COUNT    = "N/A"
SPACECRAFT_CLOCK_STOP_COUNT     = "N/A"
PRODUCT_VERSION_ID              = "1"
PRODUCER_INSTITUTION_NAME       = "APPLIED COHERENT TECHNOLOGY CORPORATION"
SOFTWARE_NAME                   = "PIPE_create_mdis_mdr"
SOFTWARE_VERSION_ID             = "09.20.11"

OBJECT                          = IMAGE
  LINES                         = 2721
  LINE_SAMPLES                  = 4162
  SAMPLE_TYPE                   = PC_REAL
  SAMPLE_BITS                   = 32
  UNIT                          = "Reflectance"
  BANDS                         = 8
  BAND_NAME                     = ("WAC FILTER 6 430 BP 40",
                                   "WAC FILTER 7 750 BP 5",
                                   "WAC FILTER 9 1000 BP 15",
                                   "OBSERVATION ID",
                                   "MDR METRIC",
                                   "SOLAR INCIDENCE ANGLE",
                                   "EMISSION ANGLE",
                                   "PHASE ANGLE")
  BAND_STORAGE_TYPE             = BAND_SEQUENTIAL
END_OBJECT                      = IMAGE

/* Map projection information about this RDR is in the IMAGE_MAP_PROJECTION
*/
/* object below.
*/

OBJECT                          = IMAGE_MAP_PROJECTION
  ^DATA_SET_MAP_PROJECTION      = "MD3_MAP.CAT"
  MAP_PROJECTION_TYPE           = "EQUIRECTANGULAR"
```

```
  A_AXIS_RADIUS                = 2440  <KM>
  B_AXIS_RADIUS                = 2440  <KM>
  C_AXIS_RADIUS                = 2440  <KM>
  FIRST_STANDARD_PARALLEL      = "N/A"
  SECOND_STANDARD_PARALLEL     = "N/A"
  POSITIVE_LONGITUDE_DIRECTION = "EAST"
  CENTER_LATITUDE              = 43.75 <DEGREE>
  CENTER_LONGITUDE             = -22.50 <DEGREE>
  LINE_FIRST_PIXEL             = 1
  LINE_LAST_PIXEL              = 2721
  SAMPLE_FIRST_PIXEL           = 1
  SAMPLE_LAST_PIXEL            = 4162
  MAP_PROJECTION_ROTATION      = 0.0
  MAP_RESOLUTION               = 128 <PIXEL/DEGREE>
  MAP_SCALE                    = 332.678338 <M/PIXEL>
  MAXIMUM_LATITUDE             = 65.000000    <DEGREE>
  MINIMUM_LATITUDE             = 43.743788    <DEGREE>
  WESTERNMOST_LONGITUDE        = -45.000000   <DEGREE>
  EASTERNMOST_LONGITUDE        = 0.009411   <DEGREE>
  LINE_PROJECTION_OFFSET       = 8321.126507 <PIXELS>
  SAMPLE_PROJECTION_OFFSET     = 2081.064868 <PIXELS>
  COORDINATE_SYSTEM_TYPE       = "BODY-FIXED ROTATING"
  COORDINATE_SYSTEM_NAME       = "PLANETOCENTRIC"
END_OBJECT                     = IMAGE_MAP_PROJECTION

END
```

APPENDIX H. MP5 LABEL

```
PDS_VERSION_ID                  = PDS3
RECORD_TYPE                     = FIXED_LENGTH
RECORD_BYTES                    = 26016
FILE_RECORDS                    = 65040

^IMAGE                          = "MDIS_MP5_128PPD_H01NP0.IMG"

/* Map-projected Multispectral RDR Identification */

DATA_SET_ID                     = "MESS-H-MDIS-5-RDR-MP5-V1.0"
PRODUCT_ID                      = "MDIS_MP5_128PPD_H01NP0"

INSTRUMENT_HOST_NAME            = "MESSENGER"
INSTRUMENT_NAME = "MERCURY DUAL IMAGING SYSTEM WIDE ANGLE CAMERA"
INSTRUMENT_ID                   = "MDIS-WAC"
TARGET_NAME                     = MERCURY
PRODUCT_TYPE                    = MAP_PROJECTED_MP5
PRODUCT_CREATION_TIME           = 2014-09-25T17:35:21.085
START_TIME                      = "N/A"
STOP_TIME                       = "N/A"
SPACECRAFT_CLOCK_START_COUNT    = "N/A"
SPACECRAFT_CLOCK_STOP_COUNT     = "N/A"
PRODUCT_VERSION_ID              = "1"
PRODUCER_INSTITUTION_NAME       = "APPLIED COHERENT TECHNOLOGY CORPORATION"
SOFTWARE_NAME                   = "PIPE_CREATE_MDIS_MDR"
SOFTWARE_VERSION_ID             = "09.20.11"

OBJECT                          = IMAGE
  LINES                         = 6504
  LINE_SAMPLES                  = 6504
  SAMPLE_TYPE                   = PC_REAL
  SAMPLE_BITS                   = 32
  UNIT                          = "Reflectance"
  BANDS                         = 10
  BAND_NAME                     = ("WAC FILTER 6 430 BP 40",
                                   "WAC FILTER 4 560 BP 5",
                                   "WAC FILTER 7 750 BP 5",
                                   "WAC FILTER 12 830 BP 5",
                                   "WAC FILTER 9 1000 BP 15",
                                   "OBSERVATION ID",
                                   "MDR METRIC",
                                   "SOLAR INCIDENCE ANGLE",
                                   "EMISSION ANGLE",
                                   "PHASE ANGLE")
  BAND_STORAGE_TYPE             = BAND_SEQUENTIAL
END_OBJECT                      = IMAGE

/* Map projection information about this RDR is in the IMAGE_MAP_PROJECTION */
/* object below.                                                            */

OBJECT                          = IMAGE_MAP_PROJECTION
  ^DATA_SET_MAP_PROJECTION      = "MP5_POLAR_MAP.CAT"
  MAP_PROJECTION_TYPE           = "POLAR STEREOGRAPHIC"
  A_AXIS_RADIUS                 = 2440  <KM>
  B_AXIS_RADIUS                 = 2440  <KM>
  C_AXIS_RADIUS                 = 2440  <KM>
  FIRST_STANDARD_PARALLEL       = "N/A"
  SECOND_STANDARD_PARALLEL      = "N/A"
  POSITIVE_LONGITUDE_DIRECTION = "EAST"
```

```
  CENTER_LATITUDE              = 90 <DEGREE>
  CENTER_LONGITUDE             = 0.00 <DEGREE>
  LINE_FIRST_PIXEL             = 1
  LINE_LAST_PIXEL              = 6504
  SAMPLE_FIRST_PIXEL           = 1
  SAMPLE_LAST_PIXEL            = 6504
  MAP_PROJECTION_ROTATION      = 0.0
  MAP_RESOLUTION               = 128 <PIXEL/DEGREE>
  MAP_SCALE                    = 332.678338 <M/PIXEL>
  MAXIMUM_LATITUDE             = 90.000000    <DEGREE>
  MINIMUM_LATITUDE             = 55.185122    <DEGREE>
  WESTERNMOST_LONGITUDE        = -180.000000   <DEGREE>
  EASTERNMOST_LONGITUDE        = 180.000000   <DEGREE>
  LINE_PROJECTION_OFFSET       = 3252.500000 <PIXELS>
  SAMPLE_PROJECTION_OFFSET     = 3252.500000 <PIXELS>
  COORDINATE_SYSTEM_TYPE       = "BODY-FIXED ROTATING"
  COORDINATE_SYSTEM_NAME       = "PLANETOCENTRIC"
END_OBJECT                     = IMAGE_MAP_PROJECTION

END
```

APPENDIX I. HIE LABEL

```
PDS_VERSION_ID                  = PDS3
RECORD_TYPE                     = FIXED_LENGTH
RECORD_BYTES                    = 33288
FILE_RECORDS                    = 32646

^IMAGE                          = "MDIS_HIE_256PPD_H03NE0.IMG"

/* Map-projected Basemap RDR Identification */

DATA_SET_ID                     = "MESS-H-MDIS-5-RDR-HIE-V1.0"
PRODUCT_ID                      = "MDIS_HIE_256PPD_H03NE0"

INSTRUMENT_HOST_NAME            = "MESSENGER"
INSTRUMENT_NAME = {"MERCURY DUAL IMAGING SYSTEM NARROW ANGLE CAMERA",
                   "MERCURY DUAL IMAGING SYSTEM WIDE ANGLE CAMERA"}
INSTRUMENT_ID                   = {"MDIS-NAC","MDIS-WAC"}
TARGET_NAME                     = MERCURY
PRODUCT_TYPE                    = MAP_PROJECTED_HIE
PRODUCT_CREATION_TIME           = 2014-09-25T16:51:35.140
START_TIME                      = "N/A"
STOP_TIME                       = "N/A"
SPACECRAFT_CLOCK_START_COUNT    = "N/A"
SPACECRAFT_CLOCK_STOP_COUNT     = "N/A"
PRODUCT_VERSION_ID              = "1"
PRODUCER_INSTITUTION_NAME       = "APPLIED COHERENT TECHNOLOGY CORPORATION"
SOFTWARE_NAME                   = "PIPE_CREATE_MDIS_BDR"
SOFTWARE_VERSION_ID             = "09.20.11"

OBJECT                          = IMAGE
  LINES                         = 5441
  LINE_SAMPLES                  = 8322
  SAMPLE_TYPE                   = PC_REAL
  SAMPLE_BITS                   = 32
  UNIT                          = "Reflectance"
  BANDS                         = 6
  BAND_NAME                     = ("REFLECTANCE 750NM",
                                   "OBSERVATION ID",
                                   "BDR METRIC",
                                   "SOLAR INCIDENCE ANGLE",
                                   "EMISSION ANGLE",
                                   "PHASE ANGLE")
  BAND_STORAGE_TYPE             = BAND_SEQUENTIAL
END_OBJECT                      = IMAGE

/* Map projection information about this RDR is in the IMAGE_MAP_PROJECTION */
/* object below.                                                            */

OBJECT                          = IMAGE_MAP_PROJECTION
  ^DATA_SET_MAP_PROJECTION      = "HIE_MAP.CAT"
  MAP_PROJECTION_TYPE           = "EQUIRECTANGULAR"
  A_AXIS_RADIUS                 = 2440  <KM>
  B_AXIS_RADIUS                 = 2440  <KM>
  C_AXIS_RADIUS                 = 2440  <KM>
  FIRST_STANDARD_PARALLEL       = "N/A"
  SECOND_STANDARD_PARALLEL      = "N/A"
  POSITIVE_LONGITUDE_DIRECTION = "EAST"
  CENTER_LATITUDE               = 43.75 <DEGREE>
  CENTER_LONGITUDE              = -112.50 <DEGREE>
  LINE_FIRST_PIXEL              = 1
```

```
  LINE_LAST_PIXEL              = 5441
  SAMPLE_FIRST_PIXEL           = 1
  SAMPLE_LAST_PIXEL            = 8322
  MAP_PROJECTION_ROTATION      = 0.0
  MAP_RESOLUTION               = 256 <PIXEL/DEGREE>
  MAP_SCALE                    = 166.351694 <M/PIXEL>
  MAXIMUM_LATITUDE             = 65.000000    <DEGREE>
  MINIMUM_LATITUDE             = 43.746094    <DEGREE>
  WESTERNMOST_LONGITUDE        = -135.000000   <DEGREE>
  EASTERNMOST_LONGITUDE        = -89.998015   <DEGREE>
  LINE_PROJECTION_OFFSET       = 16640.500007 <PIXELS>
  SAMPLE_PROJECTION_OFFSET     = 4161.316423 <PIXELS>
  COORDINATE_SYSTEM_TYPE       = "BODY-FIXED ROTATING"
  COORDINATE_SYSTEM_NAME       = "PLANETOCENTRIC"
END_OBJECT                     = IMAGE_MAP_PROJECTION

END
```

APPENDIX J. HIW LABEL

```
PDS_VERSION_ID                  = PDS3
RECORD_TYPE                     = FIXED_LENGTH
RECORD_BYTES                    = 33288
FILE_RECORDS                    = 32646

^IMAGE                          = "MDIS_HIW_256PPD_H03NE0.IMG"

/* Map-projected Basemap RDR Identification */

DATA_SET_ID                     = "MESS-H-MDIS-5-RDR-HIW-V1.0"
PRODUCT_ID                      = "MDIS_HIW_256PPD_H03NE0"

INSTRUMENT_HOST_NAME            = "MESSENGER"
INSTRUMENT_NAME = {"MERCURY DUAL IMAGING SYSTEM NARROW ANGLE CAMERA",
                   "MERCURY DUAL IMAGING SYSTEM WIDE ANGLE CAMERA"}
INSTRUMENT_ID                   = {"MDIS-NAC","MDIS-WAC"}
TARGET_NAME                     = MERCURY
PRODUCT_TYPE                    = MAP_PROJECTED_HIW
PRODUCT_CREATION_TIME           = 2014-09-25T20:41:30.209
START_TIME                      = "N/A"
STOP_TIME                       = "N/A"
SPACECRAFT_CLOCK_START_COUNT    = "N/A"
SPACECRAFT_CLOCK_STOP_COUNT     = "N/A"
PRODUCT_VERSION_ID              = "1"
PRODUCER_INSTITUTION_NAME       = "APPLIED COHERENT TECHNOLOGY CORPORATION"
SOFTWARE_NAME                   = "PIPE_CREATE_MDIS_BDR"
SOFTWARE_VERSION_ID             = "09.20.11"

OBJECT                          = IMAGE
  LINES                         = 5441
  LINE_SAMPLES                  = 8322
  SAMPLE_TYPE                   = PC_REAL
  SAMPLE_BITS                   = 32
  UNIT                          = "Reflectance"
  BANDS                         = 6
  BAND_NAME                     = ("REFLECTANCE 750NM",
                                   "OBSERVATION ID",
                                   "BDR METRIC",
                                   "SOLAR INCIDENCE ANGLE",
                                   "EMISSION ANGLE",
                                   "PHASE ANGLE")
  BAND_STORAGE_TYPE             = BAND_SEQUENTIAL
END_OBJECT                      = IMAGE

/* Map projection information about this RDR is in the IMAGE_MAP_PROJECTION */
/* object below.                                                            */

OBJECT                          = IMAGE_MAP_PROJECTION
  ^DATA_SET_MAP_PROJECTION      = "HIW_MAP.CAT"
  MAP_PROJECTION_TYPE           = "EQUIRECTANGULAR"
  A_AXIS_RADIUS                 = 2440  <KM>
  B_AXIS_RADIUS                 = 2440  <KM>
  C_AXIS_RADIUS                 = 2440  <KM>
  FIRST_STANDARD_PARALLEL       = "N/A"
  SECOND_STANDARD_PARALLEL      = "N/A"
  POSITIVE_LONGITUDE_DIRECTION = "EAST"
  CENTER_LATITUDE               = 43.75 <DEGREE>
  CENTER_LONGITUDE              = -112.50 <DEGREE>
  LINE_FIRST_PIXEL              = 1
```

```
  LINE_LAST_PIXEL              = 5441
  SAMPLE_FIRST_PIXEL           = 1
  SAMPLE_LAST_PIXEL            = 8322
  MAP_PROJECTION_ROTATION      = 0.0
  MAP_RESOLUTION               = 256 <PIXEL/DEGREE>
  MAP_SCALE                    = 166.351694 <M/PIXEL>
  MAXIMUM_LATITUDE             = 65.000000    <DEGREE>
  MINIMUM_LATITUDE             = 43.746094    <DEGREE>
  WESTERNMOST_LONGITUDE        = -135.000000   <DEGREE>
  EASTERNMOST_LONGITUDE        = -89.998015   <DEGREE>
  LINE_PROJECTION_OFFSET       = 16640.500007 <PIXELS>
  SAMPLE_PROJECTION_OFFSET     = 4161.316423 <PIXELS>
  COORDINATE_SYSTEM_TYPE       = "BODY-FIXED ROTATING"
  COORDINATE_SYSTEM_NAME       = "PLANETOCENTRIC"
END_OBJECT                     = IMAGE_MAP_PROJECTION

END
```

APPENDIX K. LOI LABEL

```
PDS_VERSION_ID                  = PDS3
RECORD_TYPE                     = FIXED_LENGTH
RECORD_BYTES                    = 42576
FILE_RECORDS                    = 32646

^IMAGE                          = "MDIS_LOI_256PPD_H02SW0.IMG"

/* Map-projected Basemap RDR Identification */

DATA_SET_ID                     = "MESS-H-MDIS-5-RDR-LOI-V1.0"
PRODUCT_ID                      = "MDIS_LOI_256PPD_H02SW0"

INSTRUMENT_HOST_NAME            = "MESSENGER"
INSTRUMENT_NAME = {"MERCURY DUAL IMAGING SYSTEM NARROW ANGLE CAMERA",
                   "MERCURY DUAL IMAGING SYSTEM WIDE ANGLE CAMERA"}
INSTRUMENT_ID                   = {"MDIS-NAC","MDIS-WAC"}
TARGET_NAME                     = MERCURY
PRODUCT_TYPE                    = MAP_PROJECTED_LOI
PRODUCT_CREATION_TIME           = 2014-09-25T16:36:10.827
START_TIME                      = "N/A"
STOP_TIME                       = "N/A"
SPACECRAFT_CLOCK_START_COUNT    = "N/A"
SPACECRAFT_CLOCK_STOP_COUNT     = "N/A"
PRODUCT_VERSION_ID              = "1"
PRODUCER_INSTITUTION_NAME       = "APPLIED COHERENT TECHNOLOGY CORPORATION"
SOFTWARE_NAME                   = "PIPE_CREATE_MDIS_MDR"
SOFTWARE_VERSION_ID             = "09.20.11"

OBJECT                          = IMAGE
  LINES                         = 5441
  LINE_SAMPLES                  = 10644
  SAMPLE_TYPE                   = PC_REAL
  SAMPLE_BITS                   = 32
  UNIT                          = "Reflectance"
  BANDS                         = 6
  BAND_NAME                     = ("REFLECTANCE 750NM",
                                   "OBSERVATION ID",
                                   "MDR METRIC",
                                   "SOLAR INCIDENCE ANGLE",
                                   "EMISSION ANGLE",
                                   "PHASE ANGLE")
  BAND_STORAGE_TYPE             = BAND_SEQUENTIAL
END_OBJECT                      = IMAGE

/* Map projection information about this RDR is in the IMAGE_MAP_PROJECTION */
/* object below.                                                            */

OBJECT                          = IMAGE_MAP_PROJECTION
  ^DATA_SET_MAP_PROJECTION      = "LOI_MAP.CAT"
  MAP_PROJECTION_TYPE           = "EQUIRECTANGULAR"
  A_AXIS_RADIUS                 = 2440  <KM>
  B_AXIS_RADIUS                 = 2440  <KM>
  C_AXIS_RADIUS                 = 2440  <KM>
  FIRST_STANDARD_PARALLEL       = "N/A"
  SECOND_STANDARD_PARALLEL      = "N/A"
  POSITIVE_LONGITUDE_DIRECTION = "EAST"
  CENTER_LATITUDE               = 22.5 <DEGREE>
  CENTER_LONGITUDE              = -67.50 <DEGREE>
  LINE_FIRST_PIXEL              = 1
```

```
  LINE_LAST_PIXEL              = 5441
  SAMPLE_FIRST_PIXEL           = 1
  SAMPLE_LAST_PIXEL            = 10644
  MAP_PROJECTION_ROTATION      = 0.0
  MAP_RESOLUTION               = 256 <PIXEL/DEGREE>
  MAP_SCALE                    = 166.351694 <M/PIXEL>
  MAXIMUM_LATITUDE             = 43.750000    <DEGREE>
  MINIMUM_LATITUDE             = 22.496094    <DEGREE>
  WESTERNMOST_LONGITUDE        = -90.000000   <DEGREE>
  EASTERNMOST_LONGITUDE        = -44.996162   <DEGREE>
  LINE_PROJECTION_OFFSET       = 11200.500005 <PIXELS>
  SAMPLE_PROJECTION_OFFSET     = 5322.046110 <PIXELS>
  COORDINATE_SYSTEM_TYPE       = "BODY-FIXED ROTATING"
  COORDINATE_SYSTEM_NAME       = "PLANETOCENTRIC"
END_OBJECT                     = IMAGE_MAP_PROJECTION

END
```

APPENDIX L. RTM LABEL

```
PDS_VERSION_ID                  = PDS3
RECORD_TYPE                     = FIXED_LENGTH
RECORD_BYTES                    = 10836
FILE_RECORDS                    = 9810

^IMAGE                          = "MDIS_RTM_N01_003722_1226427_0.IMG"

/* Map-projected Regional Targeted Mosaics (RTM) Identification */

DATA_SET_ID                     = "MESS-H-MDIS-5-RDR-RTM-V1.0"
PRODUCT_ID                      = "MDIS_RTM_N01_003722_1226427_0"

INSTRUMENT_HOST_NAME            = "MESSENGER"
INSTRUMENT_NAME = "MERCURY DUAL IMAGING SYSTEM NARROW ANGLE CAMERA"
INSTRUMENT_ID                   = "MDIS-NAC"
TARGET_NAME                     = MERCURY
PRODUCT_TYPE                    = MAP_PROJECTED_RTM
PRODUCT_CREATION_TIME           = 2014-09-25T15:24:11.362
START_TIME                      = 2012-01-05T08:30:46.768015
STOP_TIME                       = 2012-01-05T08:30:50.768015
SPACECRAFT_CLOCK_START_COUNT    = "1/0234239712:973000"
SPACECRAFT_CLOCK_STOP_COUNT     = "1/0234239716:973000"
PRODUCT_VERSION_ID              = "1"
PRODUCER_INSTITUTION_NAME       = "APPLIED COHERENT TECHNOLOGY CORPORATION"
SOFTWARE_NAME                   = "PIPE_MDIS_REGIONAL_MOSAICS_MONO"
SOFTWARE_VERSION_ID             = "05.01.14"
SOURCE_PRODUCT_ID               = {"CN0234239712M_IF_4",
                                   "CN0234239716M_IF_4"}
SITE_ID                         = "3722"
SITE_NAME = "all_site2257_scarp4"
RATIONALE_DESC = "Nadir parts of stereo pairs of NAC strips intended to build
 a stereo mosaic of a scarp that transects a crater - possible lobate
 scarp-wrinkle ridge transition"

OBJECT                          = IMAGE
  LINES                         = 1962
  LINE_SAMPLES                  = 2709
  SAMPLE_TYPE                   = PC_REAL
  SAMPLE_BITS                   = 32
  UNIT                          = "Reflectance"
  BANDS                         = 5
  BAND_NAME                     = ("REFLECTANCE 750NM",
                                   "OBSERVATION ID",
                                   "SOLAR INCIDENCE ANGLE",
                                   "EMISSION ANGLE",
                                   "PHASE ANGLE")
  BAND_STORAGE_TYPE             = BAND_SEQUENTIAL
  MISSING_CONSTANT              = -3.4028226550889045e+38
END_OBJECT                      = IMAGE

/* Map projection information about this RDR is in the IMAGE_MAP_PROJECTION */
/* object below.                                                            */

OBJECT                          = IMAGE_MAP_PROJECTION
  ^DATA_SET_MAP_PROJECTION      = "RTM_MAP.CAT"
  MAP_PROJECTION_TYPE           = "ORTHOGRAPHIC"
  A_AXIS_RADIUS                 = 2440  <KM>
  B_AXIS_RADIUS                 = 2440  <KM>
  C_AXIS_RADIUS                 = 2440  <KM>
```

```
  FIRST_STANDARD_PARALLEL      = "N/A"
  SECOND_STANDARD_PARALLEL     = "N/A"
  POSITIVE_LONGITUDE_DIRECTION = "EAST"
  CENTER_LATITUDE              = 36.5619545 <DEGREE>
  CENTER_LONGITUDE             = 76.5286789 <DEGREE>
  LINE_FIRST_PIXEL             = 1
  LINE_LAST_PIXEL              = 1962
  SAMPLE_FIRST_PIXEL           = 1
  SAMPLE_LAST_PIXEL            = 2709
  MAP_PROJECTION_ROTATION      = 0.0
  MAP_RESOLUTION               = 990 <PIXEL/DEGREE>
  MAP_SCALE                    = 43.000000 <M/PIXEL>
  MAXIMUM_LATITUDE             = 37.788514    <DEGREE>
  MINIMUM_LATITUDE             = 35.826667    <DEGREE>
  WESTERNMOST_LONGITUDE        = 74.121762   <DEGREE>
  EASTERNMOST_LONGITUDE        = 77.557063   <DEGREE>
  LINE_PROJECTION_OFFSET       = 1238.725349 <PIXELS>
  SAMPLE_PROJECTION_OFFSET     = 1883.766744 <PIXELS>
  COORDINATE_SYSTEM_TYPE       = "BODY-FIXED ROTATING"
  COORDINATE_SYSTEM_NAME       = "PLANETOCENTRIC"
END_OBJECT                     = IMAGE_MAP_PROJECTION

END
```

APPENDIX M. CDR BROWSE PRODUCT LABEL

```
PDS_VERSION_ID       = PDS3
LABEL_REVISION_NOTE  = "2008-01-18, S. Murchie"

/*** GENERAL DATA DESCRIPTION PARAMETERS ***/
MISSION_NAME         = "MESSENGER"
SPACECRAFT_NAME      = "MESSENGER"
INSTRUMENT_HOST_NAME = "MESSENGER"
DATA_SET_ID          = "MESS-E/V/H-MDIS-4-CDR-CALDATA-V1.0"
DATA_QUALITY_ID      = "0000001000000000"
PRODUCT_ID           = "CW0089570568G_IF_BRO0"
/* pcnnnnnnnnnnf_tt_BROv                */
/* p = product type (C calibrated       */
/*     or D derived)                    */
/* c = camera (W WAC or N NAC)          */
/* nnnnnnnnnn = Mission Elapsed Time    */
/* f = filter                           */
/* tt = data type (RA radiance, IF I/F, */
/*   or DE derived products)            */
/* v = version number                   */
SOURCE_PRODUCT_ID = "CW0089570568G_IF_0"
PRODUCER_INSTITUTION_NAME = "APPLIED COHERENT TECHNOLOGY CORPORATION"
SOFTWARE_NAME        = "mdiscal"
SOFTWARE_VERSION_ID  = 1.0
MISSION_PHASE_NAME   = "VENUS 2 FLYBY"
TARGET_NAME          = "VENUS"
SEQUENCE_TITLE       = "07156_APP_WAC_MOSAIC_1"

/*** TIME PARAMETERS ***/
START_TIME           = 2007-06-05T22:40:41.702888
STOP_TIME            = 2007-06-05T22:40:41.768887
SPACECRAFT_CLOCK_START_COUNT = "1/0089570568:950000"
SPACECRAFT_CLOCK_STOP_COUNT = "1/0089570568:990000"
PRODUCT_CREATION_TIME = 2007-11-13T23:30:37

/*** INSTRUMENT ENGINEERING PARAMETERS ***/
INSTRUMENT_NAME      = "MERCURY DUAL IMAGING SYSTEM WIDE ANGLE CAMERA"
INSTRUMENT_ID        = "MDIS-WAC"
FILTER_NAME          = "750 BP 5"
FILTER_NUMBER        = 7
CENTER_FILTER_WAVELENGTH = 750 <NM>
BANDWIDTH            = 5 <NM>
EXPOSURE_DURATION    = 66 <MS>
EXPOSURE_TYPE        = AUTO
DETECTOR_TEMPERATURE = -39.86  <degC>
FOCAL_PLANE_TEMPERATURE = -20.19  <degC>
FILTER_TEMPERATURE   = -20.66  <degC>
OPTICS_TEMPERATURE   = "N/A"

/*** INSTRUMENT RAW PARAMETERS ***/
MESS:MET_EXP         = 89570568
MESS:ATT_CLOCK_COUNT = 89570566
MESS:ATT_Q1          = 0.635328
MESS:ATT_Q2          = -0.259454
MESS:ATT_Q3          = -0.630866
MESS:ATT_Q4          = -0.362009
MESS:ATT_FLAG        = 7
MESS:PIV_GOAL        = 9008
MESS:PIV_POS         = 9007
MESS:PIV_READ        = 14244
```

```
MESS:PIV_CAL         = -26758
MESS:FW_GOAL         = 50148
MESS:FW_POS          = 50132
MESS:FW_READ         = 50132
MESS:CCD_TEMP        = 1025
MESS:CAM_T1          = 484
MESS:CAM_T2          = 490
MESS:EXPOSURE        = 66
MESS:DPU_ID          = 0
MESS:IMAGER          = 0
MESS:SOURCE          = 0
MESS:FPU_BIN         = 0
MESS:COMP12_8        = 0
MESS:COMP_ALG        = 2
MESS:COMP_FST        = 1
MESS:TIME_PLS        = 2
MESS:LATCH_UP        = 0
MESS:EXP_MODE        = 1
MESS:PIV_STAT        = 1
MESS:PIV_MPEN        = 1
MESS:PIV_PV          = 1
MESS:PIV_RV          = 1
MESS:FW_PV           = 1
MESS:FW_RV           = 1
MESS:AEX_STAT        = 640
MESS:AEX_STHR        = 5
MESS:AEX_TGTB        = 2800
MESS:AEX_BACB        = 500
MESS:AEX_MAXE        = 100
MESS:AEX_MINE        = 1
MESS:DLNKPRIO        = 4
MESS:WVLRATIO        = 4
MESS:PIXELBIN        = 0
MESS:SUBFRAME        = 0
MESS:SUBF_X1         = 4
MESS:SUBF_Y1         = 0
MESS:SUBF_DX1        = 0
MESS:SUBF_DY1        = 0
MESS:SUBF_X2         = 4
MESS:SUBF_Y2         = 0
MESS:SUBF_DX2        = 0
MESS:SUBF_DY2        = 0
MESS:SUBF_X3         = 0
MESS:SUBF_Y3         = 0
MESS:SUBF_DX3        = 0
MESS:SUBF_DY3        = 0
MESS:SUBF_X4         = 0
MESS:SUBF_Y4         = 0
MESS:SUBF_DX4        = 0
MESS:SUBF_DY4        = 0
MESS:SUBF_X5         = 0
MESS:SUBF_Y5         = 0
MESS:SUBF_DX5        = 0
MESS:SUBF_DY5        = 0
MESS:CRITOPNV        = 0
MESS:JAILBARS        = 0
MESS:JB_X0           = 0
MESS:JB_X1           = 0
MESS:JB_SPACE        = 0

/*** GEOMETRY INFORMATION ***/
RIGHT_ASCENSION      = 176.87216 <DEG>
DECLINATION          = -3.69716 <DEG>
```

```
TWIST_ANGLE          = 171.97896 <DEG>
RA_DEC_REF_PIXEL     = (512.00000,512.00000)
RETICLE_POINT_RA = (182.77358 <DEG>,172.41885 <DEG>,181.37369 <DEG>,
  170.89950 <DEG>)
RETICLE_POINT_DECLINATION = (0.76231 <DEG>,2.21637 <DEG>,-9.59692 <DEG>,
  -8.12579 <DEG>)

/*** TARGET PARAMETERS ***/
SC_TARGET_POSITION_VECTOR = (18408.66793 <KM>,-4290.87625 <KM>,
  3173.25955 <KM>)
TARGET_CENTER_DISTANCE = 19166.64420 <KM>

/*** TARGET WITHIN SENSOR FOV ***/
SLANT_DISTANCE       = 14090.89871 <KM>
CENTER_LATITUDE      = 35.73941 <DEG>
CENTER_LONGITUDE     = 226.54464 <DEG>
HORIZONTAL_PIXEL_SCALE = 2530.43332 <M>
VERTICAL_PIXEL_SCALE = 2530.43332 <M>
SMEAR_MAGNITUDE      = 10.38328 <PIXELS>
SMEAR_AZIMUTH        = 272.50295 <DEG>
NORTH_AZIMUTH        = 272.56310 <DEG>
RETICLE_POINT_LATITUDE = ("N/A",47.22207 <DEG>,24.61941 <DEG>,
  20.95210 <DEG>)
RETICLE_POINT_LONGITUDE = ("N/A",244.79392 <DEG>,208.68936 <DEG>,
  239.57209 <DEG>)

/*** SPACECRAFT POSITION WITH RESPECT TO CENTRAL BODY ***/
SUB_SPACECRAFT_LATITUDE = 14.91164 <DEG>
SUB_SPACECRAFT_LONGITUDE = 246.92915 <DEG>
SPACECRAFT_ALTITUDE = 13114.84420 <KM>
SUB_SPACECRAFT_AZIMUTH = 38.96248 <DEG>

/*** SPACECRAFT LOCATION ***/
SPACECRAFT_SOLAR_DISTANCE = 108026224.29985 <KM>
SC_SUN_POSITION_VECTOR = (-94861341.41580 <KM>,-49114033.01048 <KM>,
  -16087349.15147 <KM>)
SC_SUN_VELOCITY_VECTOR = (-6.96273 <KM/S>,29.34676 <KM/S>,
  17.78406 <KM/S>)

/*** VIEWING AND LIGHTING GEOMETRY (SUN ON TARGET) ***/
SOLAR_DISTANCE       = 108040911.97274 <KM>
SUB_SOLAR_AZIMUTH    = 11.49500 <DEG>
SUB_SOLAR_LATITUDE   = -1.29302 <DEG>
SUB_SOLAR_LONGITUDE  = 283.86863 <DEG>
INCIDENCE_ANGLE      = 64.85698 <DEG>
PHASE_ANGLE          = 30.69683 <DEG>
EMISSION_ANGLE       = 39.19187 <DEG>
LOCAL_HOUR_ANGLE     = 122.67601 <DEG>

/*** GEOMETRY FOR EACH SUBFRAME ***/
GROUP = SUBFRAME1_PARAMETERS
  RETICLE_POINT_LATITUDE = ("N/A","N/A","N/A","N/A")
  RETICLE_POINT_LONGITUDE = ("N/A","N/A","N/A","N/A")
END_GROUP = SUBFRAME1_PARAMETERS

GROUP = SUBFRAME2_PARAMETERS
  RETICLE_POINT_LATITUDE = ("N/A","N/A","N/A","N/A")
  RETICLE_POINT_LONGITUDE = ("N/A","N/A","N/A","N/A")
END_GROUP = SUBFRAME2_PARAMETERS

GROUP = SUBFRAME3_PARAMETERS
  RETICLE_POINT_LATITUDE = ("N/A","N/A","N/A","N/A")
  RETICLE_POINT_LONGITUDE = ("N/A","N/A","N/A","N/A")
```

```
END_GROUP = SUBFRAME3_PARAMETERS

GROUP = SUBFRAME4_PARAMETERS
  RETICLE_POINT_LATITUDE = ("N/A","N/A","N/A","N/A")
  RETICLE_POINT_LONGITUDE = ("N/A","N/A","N/A","N/A")
END_GROUP = SUBFRAME4_PARAMETERS

GROUP = SUBFRAME5_PARAMETERS
  RETICLE_POINT_LATITUDE = ("N/A","N/A","N/A","N/A")
  RETICLE_POINT_LONGITUDE = ("N/A","N/A","N/A","N/A")
END_GROUP = SUBFRAME5_PARAMETERS

/* These parameters describe the browse image as a PDS document. */

^DOCUMENT               = "CW0089570568G_IF_BRO0.PNG"
OBJECT                  = DOCUMENT
  DOCUMENT_NAME       = "CW0089570568G_IF_BRO0"
  DOCUMENT_FORMAT     = PNG
  DOCUMENT_TOPIC_TYPE = "BROWSE IMAGE"
  INTERCHANGE_FORMAT  = BINARY
  PUBLICATION_DATE    = 2008-01-17
  SOURCE_PRODUCT_ID   = "CW0089570568G_IF_0"
  LINES               = 1024
  LINE_SAMPLES        = 1024
  SAMPLE_TYPE         = LSB_UNSIGNED_INTEGER
  SAMPLE_BITS         = 8
  DERIVED_MINIMUM     = 0
  DERIVED_MAXIMUM     = 250
  OFFSET              = 0
  SCALING_FACTOR      = 2000
  MISSING_CONSTANT    = 255
  DESCRIPTION         = "This file is a scaled image of an MDIS CDR
                         calibrated to units of I/F."
END_OBJECT            = DOCUMENT
END
```

APPENDIX N. BDR BROWSE PRODUCT LABEL

TBD.

APPENDIX O. MDR BROWSE PRODUCT LABEL

TBD.

APPENDIX P. MD3 BROWSE PRODUCT LABEL

TBD.

APPENDIX Q. MP5 BROWSE PRODUCT LABEL

TBD.

APPENDIX R. HIE BROWSE PRODUCT LABEL

TBD.

APPENDIX S. HIW BROWSE PRODUCT LABEL

TBD.

APPENDIX T. LOI BROWSE PRODUCT LABEL

TBD.

APPENDIX U. RTM BROWSE PRODUCT LABEL

TBD.

APPENDIX V. ATMEL TH7888A DATA SHEET

Features

- 1024 x 1024 Pixels with Memory Zone
- Up to 30 Images/Second
- Built-in Antiblooming Device Providing an Electric Shutter Function
- Pixel: 14 µm x 14 µm
- Image Zone: 14.34 x 14.34 mm^2
- Two Outputs at 20 MHz Each
- Readout Through 1 or 2 Outputs
- Possible Binning 2 x 2
- Optical Shield Against Parasitic Reflexions and Stray Light
- A/R Window in 400 - 700 nm Bandwidth

Description

The TH7888A is particularly designed for high data rate applications (up to 30 pictures/second in 1024 x 1024 progressive scan format) in the medical and industrial fields. This area array image sensor consists of a 1024 x 1024 pixels (14 µm x 14 µm) image zone associated with a memory zone (masked with an optical shield). To increase the data rate, two separate outputs are provided, which can be used for parallel readout (the readout frequency is up to 20 MHz/output, leading to a total readout frequency of 40 MHz). These two outputs allow three readout modes (single or dual port). The TH7888A is designed with an antiblooming structure which provides an electronic shutter capability. Moreover, the 2 x 2 binning mode is available on this sensor, providing an image size of 512 x 512 pixels with 28 µm x 28 µm pixels. The TH7888A package is sealed with a specific anti-reflective window optimized in the 400 - 700 nm spectrum bandwidth on the sealed version.

Area Array CCD Image Sensor (1024 x 1024 Pixels with Antiblooming)

TH7888A

Rev. 1999A–IMAGE–09/03

Atmel Headquarters

Corporate Headquarters
2325 Orchard Parkway
San Jose, CA 95131, USA
TEL 1(408) 441-0311
FAX 1(408) 487-2600

Europe
Atmel Sarl
Route des Arsenaux 41
Case Postale 80
CH-1705 Fribourg
Switzerland
TEL (41) 26-426-5555
FAX (41) 26-426-5500

Asia
Room 1219
Chinachem Golden Plaza
77 Mody Road Tsimshatsui
East Kowloon
Hong Kong
TEL (852) 2721-9778
FAX (852) 2722-1369

Japan
9F, Tonetsu Shinkawa Bldg.
1-24-8 Shinkawa
Chuo-ku, Tokyo 104-0033
Japan
TEL (81) 3-3523-3551
FAX (81) 3-3523-7581

Atmel Operations

Memory
2325 Orchard Parkway
San Jose, CA 95131, USA
TEL 1(408) 441-0311
FAX 1(408) 436-4314

Microcontrollers
2325 Orchard Parkway
San Jose, CA 95131, USA
TEL 1(408) 441-0311
FAX 1(408) 436-4314

La Chantrerie
BP 70602
44306 Nantes Cedex 3, France
TEL (33) 2-40-18-18-18
FAX (33) 2-40-18-19-60

ASIC/ASSP/Smart Cards
Zone Industrielle
13106 Rousset Cedex, France
TEL (33) 4-42-53-60-00
FAX (33) 4-42-53-60-01

1150 East Cheyenne Mtn. Blvd.
Colorado Springs, CO 80906, USA
TEL 1(719) 576-3300
FAX 1(719) 540-1759

Scottish Enterprise Technology Park
Maxwell Building
East Kilbride G75 0QR, Scotland
TEL (44) 1355-803-000
FAX (44) 1355-242-743

RF/Automotive
Theresienstrasse 2
Postfach 3535
74025 Heilbronn, Germany
TEL (49) 71-31-67-0
FAX (49) 71-31-67-2340

1150 East Cheyenne Mtn. Blvd.
Colorado Springs, CO 80906, USA
TEL 1(719) 576-3300
FAX 1(719) 540-1759

Biometrics/Imaging/Hi-Rel MPU/ High Speed Converters/RF Datacom
Avenue de Rochepleine
BP 123
38521 Saint-Egreve Cedex, France
TEL (33) 4-76-58-30-00
FAX (33) 4-76-58-34-80

Literature Requests
www.atmel.com/literature

© Atmel Corporation 2003.
Atmel Corporation makes no warranty for the use of its products, other than those expressly contained in the Company's standard warranty which is detailed in Atmel's Terms and Conditions located on the Company's web site. The Company assumes no responsibility for any errors which may appear in this document, reserves the right to change devices or specifications detailed herein at any time without notice, and does not make any commitment to update the information contained herein. No licenses to patents or other intellectual property of Atmel are granted by the Company in connection with the sale of Atmel products, expressly or by implication. Atmel's products are not authorized for use as critical components in life support devices or systems.

© Atmel Corporation 2003. All rights reserved. Atmel© is the registered trademark of Atmel Corporation or its subsidiaries. Other terms and product names may be the trademarks of others.

Printed on recycled paper.

1999A–IMAGE–09/03 0M

Figure 1. TH7888A General Sensor Organization

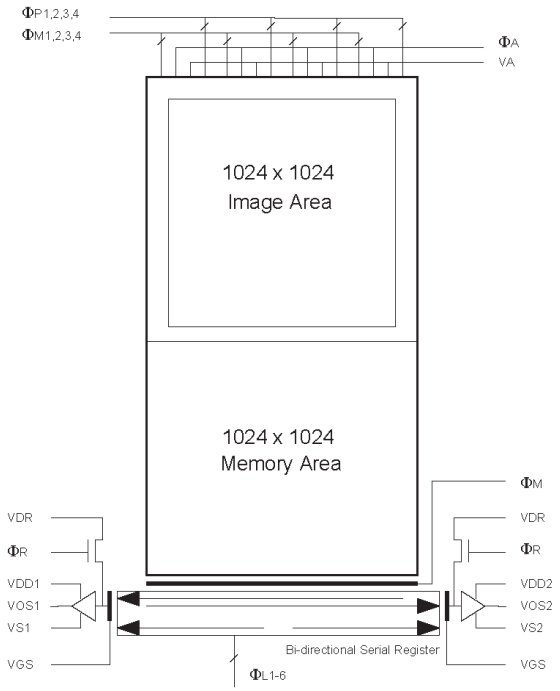

Functional Overview

Extra dark lines are provided for use as dark references or for smearing digital correction.

Extra dark pixels are provided for dark line reference clamping. Each frame consists of 1056 video lines:

- 1 dummy line
- 12 useful dark reference lines (with optical shield)
- 3 isolation lines
- 1024 useful lines
- 3 isolation lines
- 12 dark reference lines (with optical shield)
- 1 dummy line

Each video line is made up of 546 or 1058 elements, depending on the readout mode (single or dual port mode):

- 12 inactive prescan elements
- 1 isolation prescan element
- 16 useful dark references (with optical shield)
- 5 isolation elements
- 512 or 1024 useful video pixels

Pin Description

Figure 2. Pin Overview

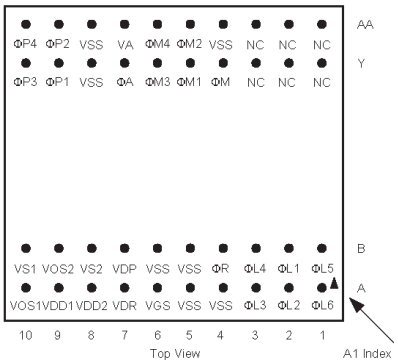

Table 1. Pin Description

Pin Number	Symbol	Designation
Y9	ΦP1	Image zone clocks
AA9	ΦP2	
Y10	ΦP3	
AA10	ΦP4	
Y5	ΦM1	Memory zone clocks
AA5	ΦM2	
Y6	ΦM3	
AA6	ΦM4	
Y4	ΦM	Memory to register clock
B2	ΦL1	Readout register clocks
A2	ΦL2	
A3	ΦL3	
B3	ΦL4	
B1	ΦL5	
A1	ΦL6	
A9	VDD1	Output amplifier drain supply
A8	VDD2	
B10	VS1	Output amplifier source supply
B8	VS2	
B7	VDP	Protection drain bias
A6	VGS	Register output gate bias
A10	VOS1	Video outputs
B9	VOS2	
B4	ΦR	Reset clock

Table 1. Pin Description (Continued)

Pin Number	Symbol	Designation
Y7	ΦA	Antiblooming gate clock
A7	VDR	Reset bias
AA7	VA	Antiblooming diode bias
A4, A5, B5, B6	VSS	Substrate bias
Y8, AA4, AA8	VSS	

Geometrical Characteristics

Figure 3. Pixel Layout

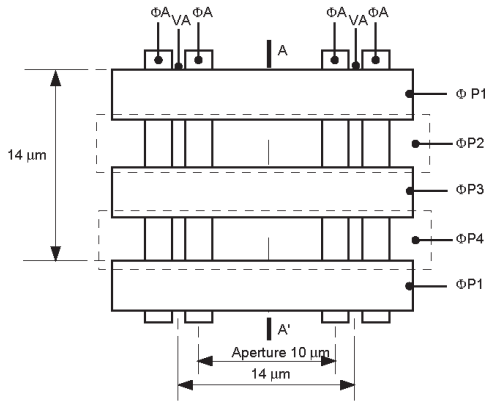

Figure 4. AA Cross Section

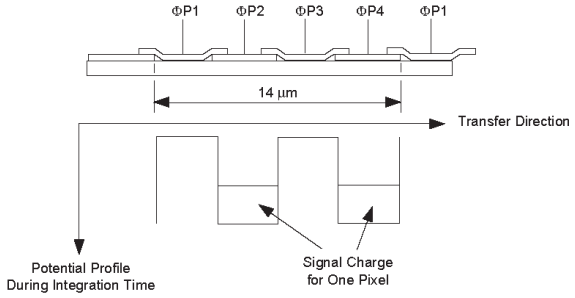

Absolute Maximum Ratings*

Storage Temperature	-55°C to +150°C
Operating Temperature	-40°C to +85°C
Thermal Cycling	15°C/mn
Maximum Applied Voltages:	
• Pins: Y9, AA9, Y10, AA10, Y5, AA5, Y6, AA6, Y4, B2, A2, A3, B3, B1, A1, B4, A6	-0.3 V to 15 V
• Pins: A9, A8, B10, B8, B7, A7, AA7	-0.3 V to 15.5 V
• Pin: Y7	-0.3 V to 12 V
• Pins: A4, A5, B5, B6, Y8, AA4, AA8	0 V (ground)

*NOTICE: *Stresses above those listed under absolute maximum ratings may cause permanent device failure. Functionality at or above these limits is not implied. Exposure to absolute maximum ratings for extended periods may affect device reliability. Operating range defines the limits within which functionality is guaranteed. Electrical limits of applied signals are given in the operating conditions section.

Operating Precautions

Shorting the video outputs to any pin, even temporarily, can permanently damage the on-chip output amplifier.

Operating Conditions

Table 2. DC Characteristics

Parameter	Symbol	Value			Unit
		Min	Typ	Max	
Output amplifier drain supply	VDD1, VDD2	14.5	15	15.5	V
Protection drain bias	VDP	14.5	15	15.5	V
Reset bias	VDR	14.5	15	15.5	V
Antiblooming diode bias	VA	14.5	15	15.5	V
Register output gate bias	VGS	2.2	2.5	2.8	V
Output amplifier source supply	VS1(2), VS2		0		V
Ground(1)	VSS(2)		0		V

Notes: 1. Ground: note that the package metal back is grounded.
2. In dynamic mode, to avoid possible damage to the device, the addition of a Schottky diode is recommended (for example; diode reference BAR 43S) between VS1 and VSS ground in order to increase the potential on VS1, thus avoiding any direct mode diode current during clock transitions.

Readout Mode

The serial readout register is operated in a two-phase transfer mode. However, there are 6 separate command electrodes that should be connected differently, depending on the required readout mode. The following table gives the connections to be made for each mode.

Table 3. Readout Modes

Readout Modes Drive Clocks (Signals)	1 Output, VOS 1	1 Output, VOS2 (Mirror Effect)	2 Outputs (Parallel)
ΦL1	Pins B2, B3, B1	Pins B2, A3, A1	Pins B2, B3, A1
ΦL2	Pins A2, A3, A1	Pins A2, B3, B1	Pins A2, A3, B1

Table 4. Timing Parameters

Definition	Symbol	Comments
Vertical transfer period	T_V	Nominal value = 800 nm
Vertical transfer subdivision	T_O	Tv = 8 x To
Rise time	tr	For vertical transfer clocks (between 10% and 90% of the transition time)
Fall time	tf	
Readout register clock transition time	t1	
Reset clock transition time	t2	
Delay between output reset signal and reset clock	td	

Timing Diagrams

The following diagrams describe the 20 MHz readout frequency and 1.25 MHz vertical transfer frequency.

Figure 5. Frame Timing Diagram

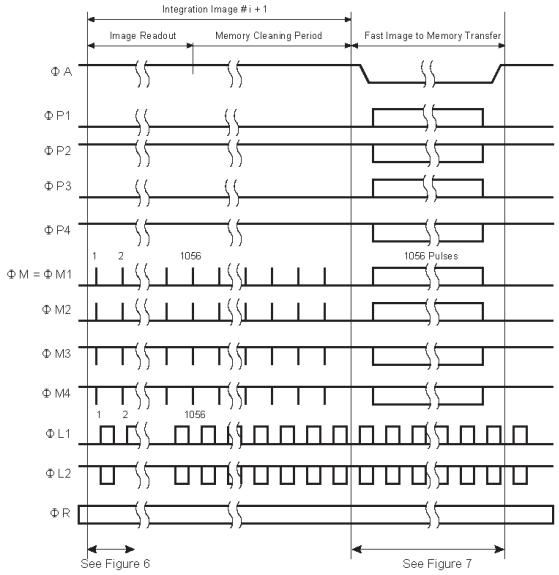

Figure 6. Line Timing Diagram

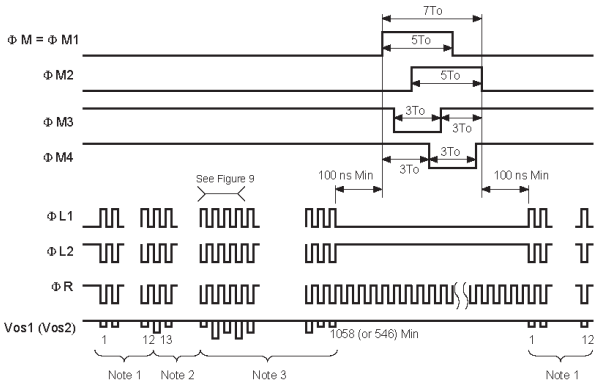

Notes:
1. 12 pre-scan elements
2. 1 isolation element, 16 dark reference pixels, 5 isolation elements
3. 1024 useful video pixels (single output readout mode), 512 useful video pixels (dual output readout mode)

Figure 7. Vertical Transfer During Image to Memory Zone Transfer

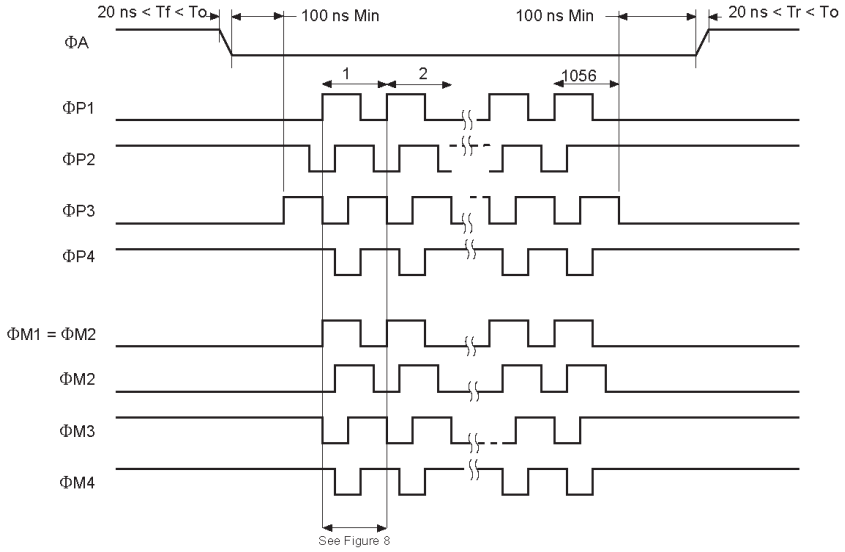

Figure 8. Transfer Period from Image Zone to Memory Zone (ΦP and ΦM for 1.25 Vertical Transfer Frequency FV = 1: Tv)

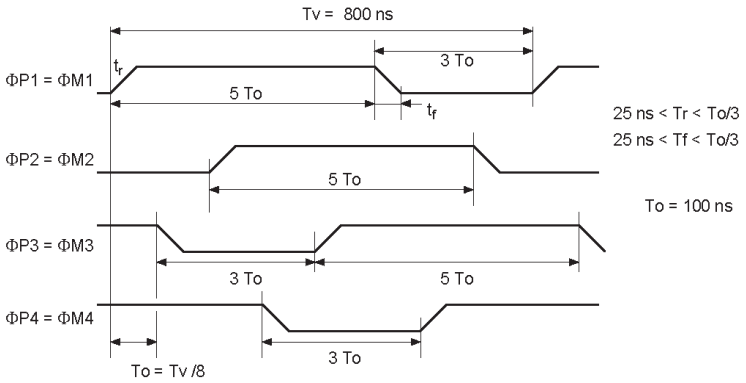

Note: Tr = Rise time
Tf = Fall time
To = Vertical transfer time subdivision
Tv = Vertical transfer period.

Figure 9. Output Diagram for Readout Register and Reset Clock 20 MHz Applications
Crossover of Complementary Clocks (ΦL1, ΦL2). Between 30% and 70% of Maximum Amplitude.

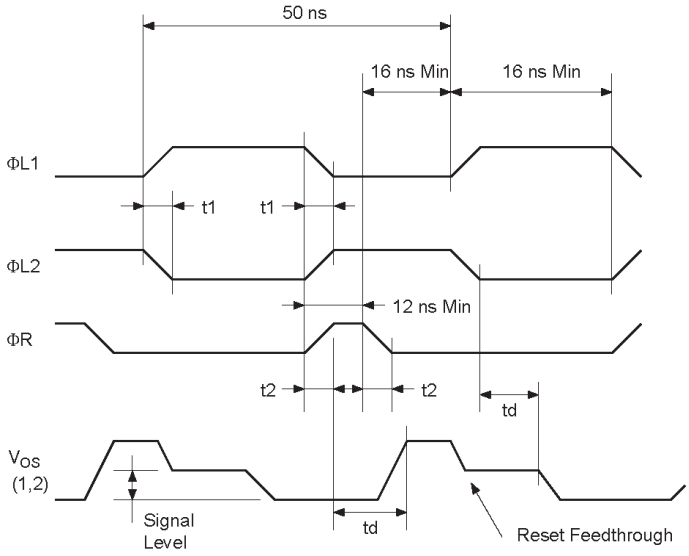

Note: t1 = 7 ns typical
t2 = 5 ns typical
td = 8 ns typical delay time

Binning Mode Operation

In binning mode operation, the image is composed of 512 x 512 pixels (28 µm x 28 µm each).

Figure 10. Summation in the Readout Register of Two Adjacent Lines

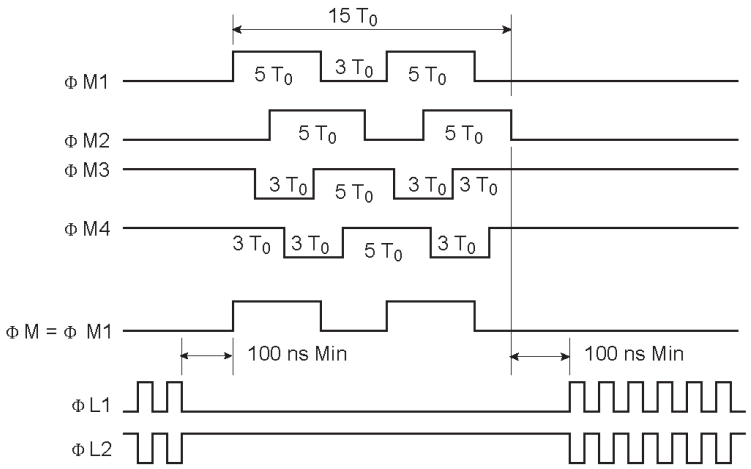

Note: To view fall and rise times see Figure 8 on page 8

Figure 11. Summation of Two Adjacent Pixels

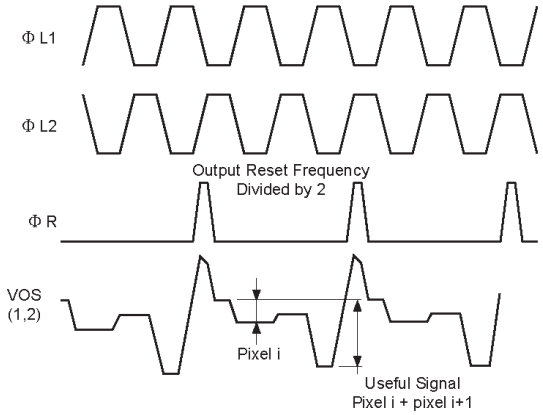

Exposure Time Reduction

The TH7888A provides an exposure time control (electronic shutter) function.

The exposure time reduction is achieved by pulsing all the ΦPi gates to 0 V to continuously remove all the photogenerated electrons through antiblooming drain VA.

Figure 12. Timing Diagram for Electronic Shutter

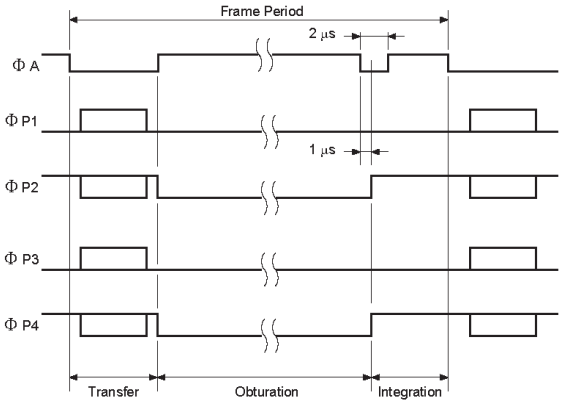

Note: To view fall and rise times see Figure 6 on page 7

Table 5. Drive Clock Characteristics

Parameter	Symbol	Value Min	Value Typ	Value Max	Unit	Remarks
Image zone clocks High level Low level	ΦP1, 1, 3, 4	 7.5 0	 8 0.5	 8.5 0.8	 V V	Typical input capacitance 15 nF See Figure 12
Memory zone clocks High level Low level	ΦM1, 2, 3, 4	 7.5 0	 8 0.5	 8.5 0.8	 V V	Typical input capacitance 15.5 nF See Figure 12
Memory register clocks High level Low level	ΦM	 8.5 0	 9 0.5	 9.5 0.8	 V V	Typical input capacitance 10 pF
Antiblooming gate High level (integration) Low level (transfer)	ΦA	 3 0	 4 0.5	 7 0.8	 V V	Typical input capacitance 14 nF See Figure 12 and Figure 14
Reset gate High level Low level	ΦR	 10 0	 12 2	 13 3	 V V	Typical input capacitance 10 pF
Readout register clocks High level Low level	ΦL1, 2	 8.5 0	 9 0.5	 9.5 0.8	 V V	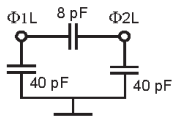
Maximum readout register frequency	F_H	20	–	–	MHz	See Figure 9
Maximum image zone to memory zone Transfer frequency	F_V	1.7	–	–	MHz	See Figure 14

Figure 13. Drive Clocks Capacitance Network

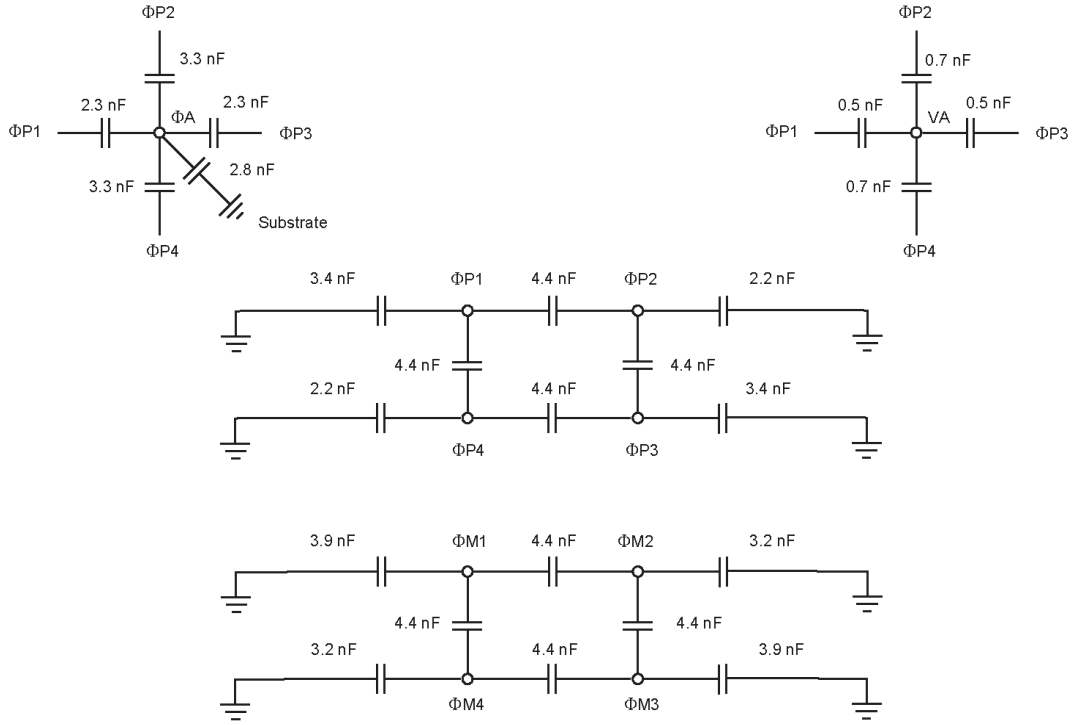

Table 6. Static and Dynamic Electrical Characteristics

Parameter	Symbol	Value			Unit	Remarks
		Min	Typ	Max		
Output amplifier supply current	I_{DD}		10	15	mA	per amplifier
Output impedance	Z_S	200	225	250	Ω	
DC output level	V_{REF}		11		V	
Output conversion factor	CVF	5.5	6	6.5	µV/e-	

Electro-optical Performance

- General conditions:
  Temp = 25°C (package temperature)
  Light source: 2854 K with 2 mm BG38 filter (unless specified) + F/3.5 optical aperture.
  30 images per second mode (Ti = 33 ms) under typical operating conditions
- Readout mode: 2 outputs
- Values exclude dummy elements and blemishes

Table 7. Performance Description and Values

Parameter	Symbol	Value			Unit	Remarks
		Min	Typ	Max		
Output register saturation level	V_{SAT} reg	–	2.6	–	V	
Pixel saturation level	V_{SAT}	1.6	1.9	3	V	(1)
Pixel saturation charge (electron per pixel)	Q_{SAT}	–	320	–	ke-	
Responsivity at 640 nm Responsivity with BG38 filter	R	– 3	6.5 4	– –	V/(µJ/cm^2) V/(µJ/cm^2)	
Quantum efficiency at 640 nm	QE	–	15	–	%	See Figure 17
Photo response non uniformity (1σ)	PRNU	–	0.4	1.7	%Vos	
Dark signal non uniformity (1σ)	DSNU	–	0.28	0.4	mV	(2)
Average dark signal	V_{DS}	–	2	3	mV	(3)
		–	4	5.6	mV	(4)
Temporal RMS noise in darkness (last line)	V_N	–	200	–	µV	(5)
Dynamic range	D	–	80	–	dB	(6)
Horizontal modulation transfer function at 500 nm	MTF	–	70	–	%	(7)
Vertical charge transfer inefficiency (per stage)	VCTI	–	–	$2.5.10^{-5}$	–	(8)
Horizontal charge transfer inefficiency (per stage)	HCTI	–	–	5.10^{-5}	–	(9)

Notes:
1. Pixel saturation (full well) as a function of vertical transfer frequency (see Figure 14 on page 15) and antiblooming adjustment (see Figure 15 on page 15).
2. After substraction of dark signal slope due to memory readout time.
3. First line level referenced from inactive prescan elements (12 samples).
4. Last line level referenced from inactive prescan elements (12 samples).
5. Measured with Correlated Double Sampling (CDS) including 160 µV readout noise and dark current noise in general test conditions.
6. Saturation to RMS noise in darkness ratio.
7. At Nyquist frequency.
8. VSAT/2 measurement and 417 kHz vertical transfer frequency.
9. VSAT/2 measurement and 10 MHz horizontal transfer frequency.

Figure 14. Saturation Level by Full Well with Antiblooming Off (ΦA High = 0 V) Versus the Vertical Transfer Frequency

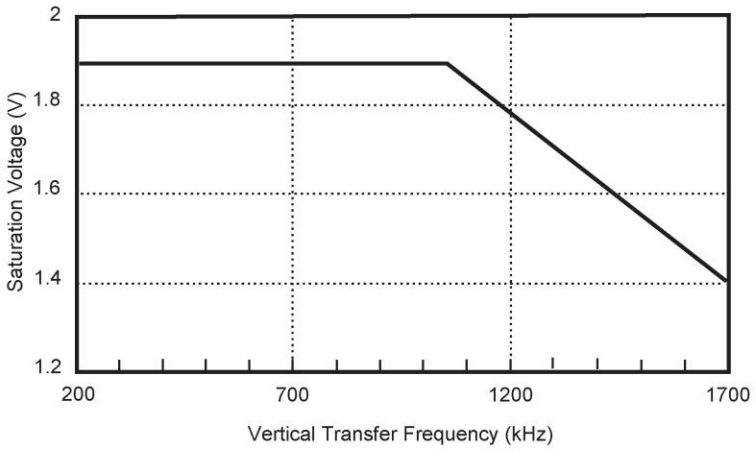

Figure 15. Saturation Level Limitation by the Antiblooming Effect on the Pixel (Typical Operating Conditions)

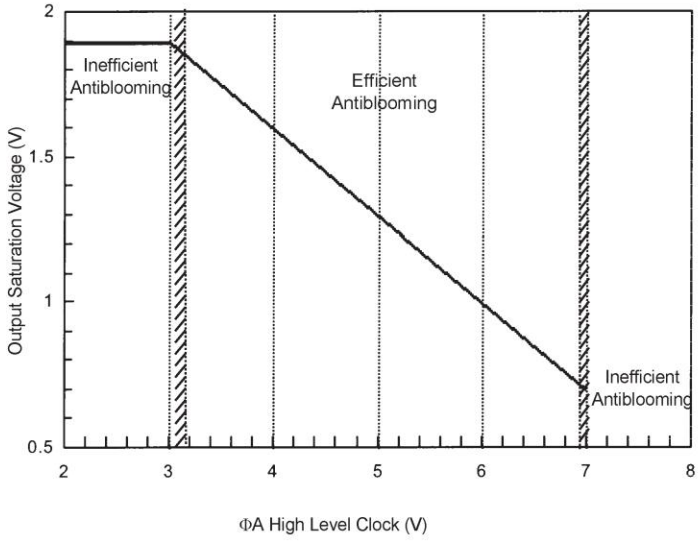

Figure 16. Smearing Effect

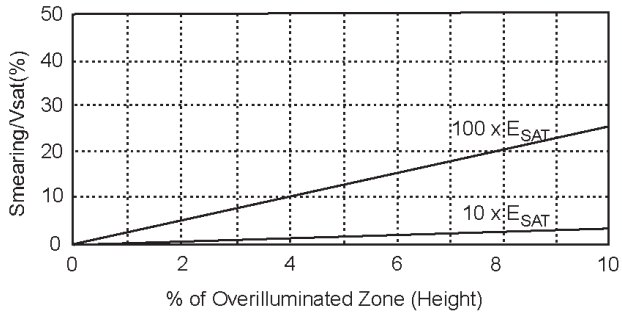

N_{ESAT} = number of times E_{SAT}

$$\frac{V_{SMEARING}}{V_{SAT}} = N_{ESAT} \times \frac{T_V}{T_I} \times H$$

with $E_{SAT} = V_{SAT}$/responsivity
(typical illumination conditions)

- Ti = integration time
- Tv = image to memory transfer time

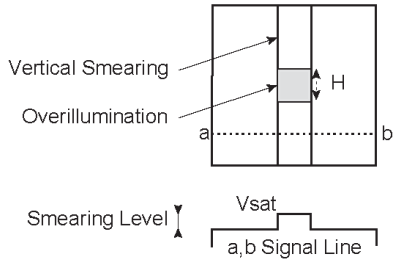

Figure 17. Spectral Response with A/R Window (Typical Case)

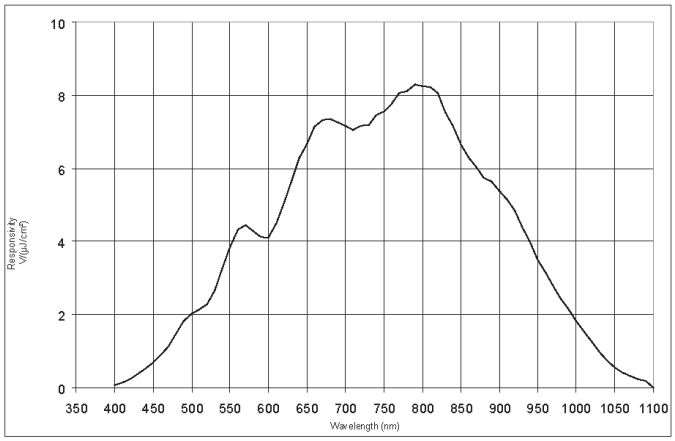

Image Quality Grade

Blemish Maximum area of 2 x 2 defective pixels.

Clusters Less than 7 contiguous defects in a column.

Columns More than 7 contiguous defects in a column.

General Conditions

Room Temperature .....25°C

Frequency 30 images/s(under typical operating conditions)

Considered image zone .....1024 x 1024

Light Source 2854K with BG38 filter + F/3.5 optical aperture

At Vos = 0.7 Vsat

Type	White	Black
Blemishes/clusters	$\alpha > 20\% \ \overline{V}os$	$\lvert\alpha\rvert > 30\% \ \overline{V}os$
Columns	$\alpha > 10\% \ \overline{V}os$	$\lvert\alpha\rvert > 10\% \ \overline{V}os$

In Darkness

Blemishes/clusters	$\alpha > 10$ mV (*)
Columns	$\alpha > 5$ mV (*)
(*) reference is Vo: average darkness signal	

Number of Defects

Total pixel numbers affected by blemishes and clusters 100

Maximum number of clusters.....10

Maximum number of columns.....5

α: amplitude of video signal of defect with respect to mean output voltage $\overline{V}os$

Ordering Codes

TH7888AVRHRB: sealed version

TH7888AVRHN: unsealed version

Figure 18. Ordering Information Key

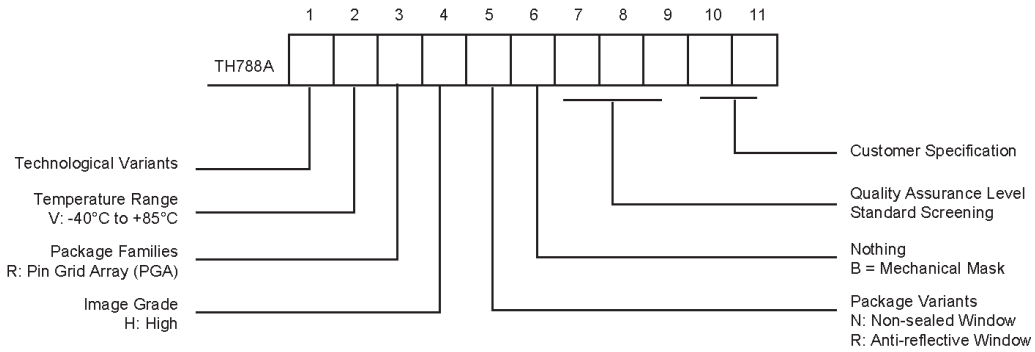

Package Outline

Figure 19. Package Drawing for 40-lead PGA

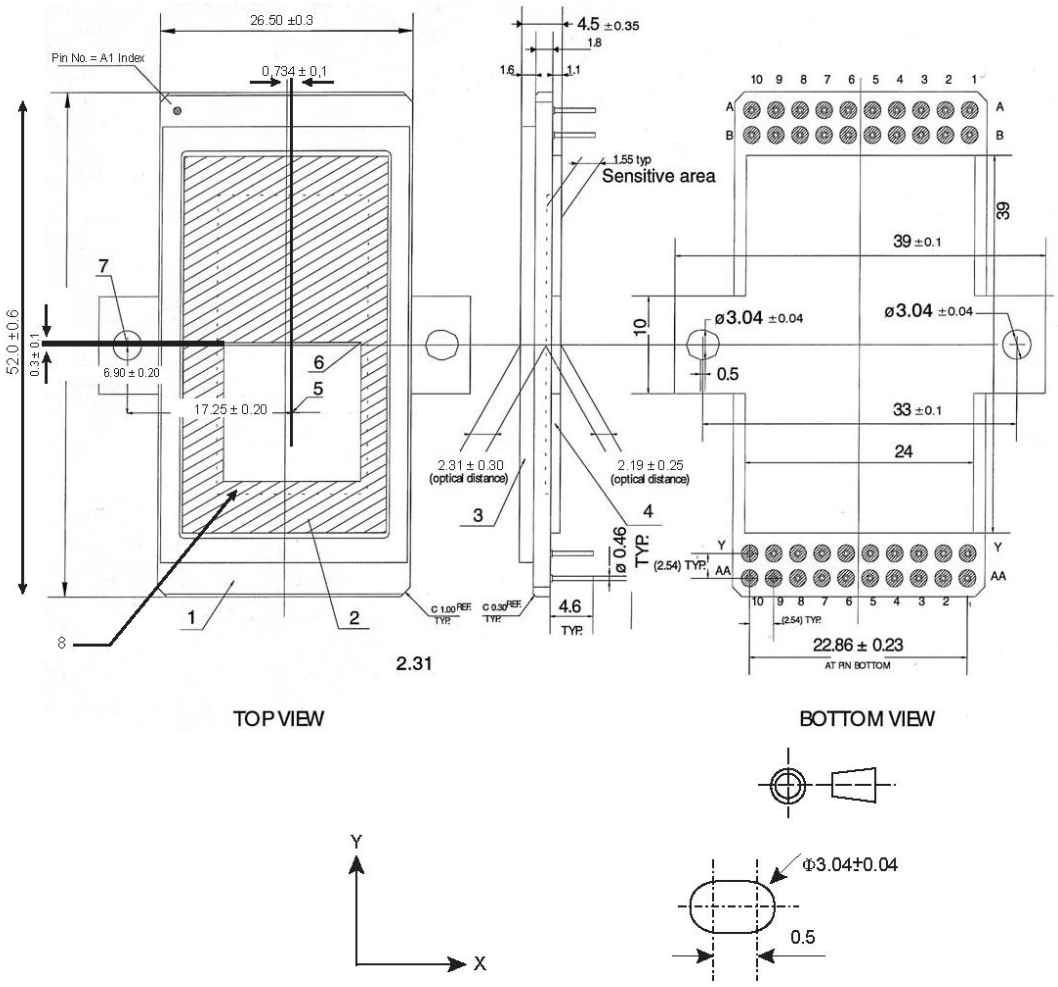

Notes:
1. All values are in mm.
2. Black alumina 40-lead PGA package
3. Black optical mask (only on sealed version)
4. 400 nm – 700 nm AR coated window (R < 1% per side). Only on sealed version
5. Metal back, (CuW – copper tungsten) gold plated. Electrically grounded (VSS)
6. Optical center
7. First useful pixel (readout through Vos1)
8. Mechanical reference
9. Photosensitive area dimensions 14,392(X) x 14,358(Y)

Parameter	Mechanical Distance	Optical Distance	Unit
Z_{top}	2.82 ± 0.31	2.31 ± 0.30	mm
Z_{bottom}	1.68 ± 0.15	2.19 ± 0.25	mm